Data sheet

LBV330-XXBGDRAMX1800

LBV3xx

LEVEL SENSORS

SICK
Sensor Intelligence.

Illustration may differ

Ordering information

Type	part no.
LBV330-XXBGDRAMX1800	6038308

Other models and accessories → www.sick.com/LBV3xx

Detailed technical data

Features

Medium	Bulk solids
Measurement	Switch
Probe type	Tuning fork
Probe length	1,800 mm
Process pressure	–1 bar ... 25 bar
Process temperature	–50 °C ... +250 °C [1]
Fill material density	≥ 0.008 g/cm³
Particle size	< 10 mm

[1] Temperature range with temperature adapter.

Performance

Accuracy of sensor element	± 10 mm
Reproducibility	≤ 5 mm
Response time	500 ms [1] 1,000 ms [2]
MTBF	4,61*10^6 h

[1] When covered.
[2] When uncovered.

Electronics

Communication interface	-
Supply voltage	20 V DC ... 72 V DC 20 V AC ... 253 V AC
Power consumption	5 mA ... 30 mA
Initialization time	< 2 s
VDE protection class 1	✓
Connection type	M20 x 1.5
Output signal	Double relay (DPDT)
Electronics	Double relay (DPDT)

Hysteresis	10 mm
Output current	> 10 µA; < 3A AC, 1A DC
Inductive load	750 VA 54 W
Capacitive load	750 VA 54 W
Contact load	Min. 50 mW / max. 750 VA, 54 W
Enclosure rating	IP66 IP67

Mechanics

Wetted parts	Stainless steel 1.4404 / 316L
Process connection	G 1½ A PN 25
Housing material	Aluminum
Sensor material	Stainless steel 1.4404

Ambient data

Ambient operating temperature	–40 °C ... +80 °C
Ambient temperature, storage	–40 °C ... +80 °C

Classifications

ECLASS 5.0	27273202
ECLASS 5.1.4	27273202
ECLASS 6.0	27273202
ECLASS 6.2	27273202
ECLASS 7.0	27273202
ECLASS 8.0	27273202
ECLASS 8.1	27273202
ECLASS 9.0	27273202
ECLASS 10.0	27273202
ECLASS 11.0	27273202
ECLASS 12.0	27273106
ETIM 5.0	EC002654
ETIM 6.0	EC002654
ETIM 7.0	EC002654
ETIM 8.0	EC002654
UNSPSC 16.0901	41111938

Certificates

EU declaration of conformity	✓
UK declaration of conformity	✓
ACMA declaration of conformity	✓
China RoHS	✓
FDA certificate	✓

Dimensional drawing LBV330 threaded version G 1½ A (DIN ISO 228/1)

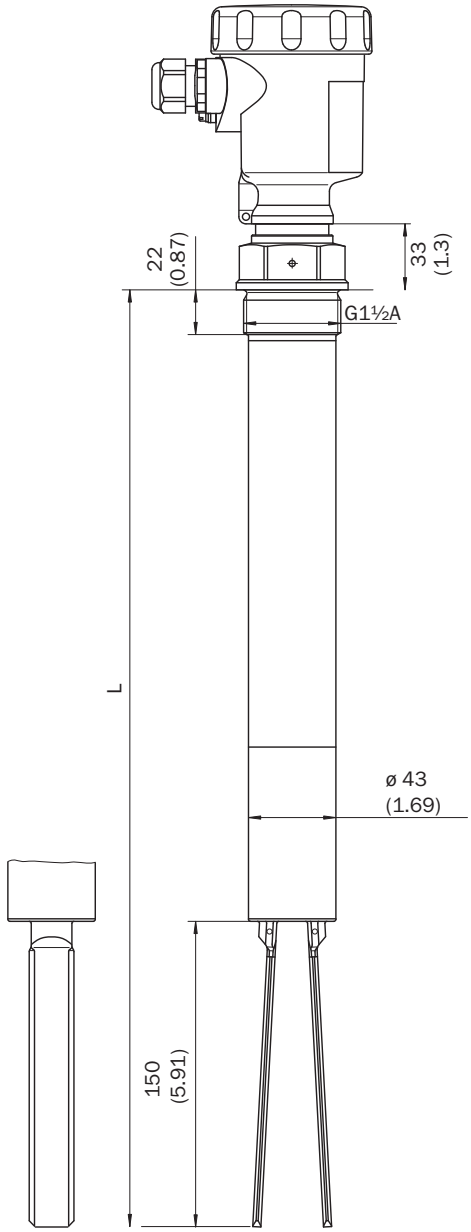

Dimensions in mm (inch)

Dimensional drawing Temperature adapter

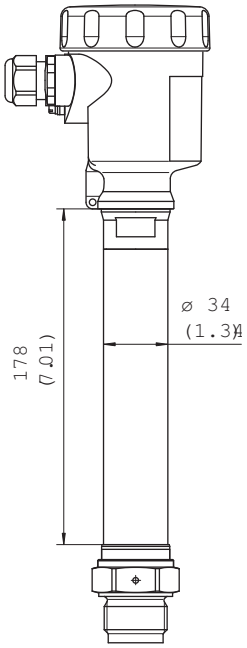

Dimensions in mm (inch)

Connection diagram Double relay connection diagram

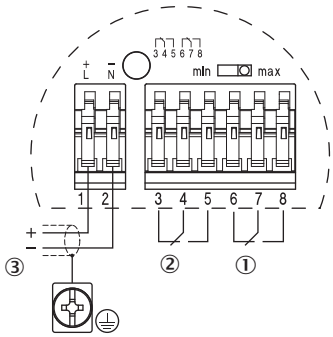

① Relay output
② Relay output
③ Power supply

Instruction for installation Flow orientation of the tuning fork

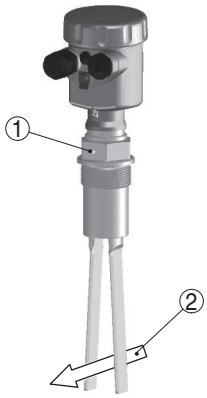

① Marking with screwed version
② Direction of flow

Instruction for installation Horizontal mounting

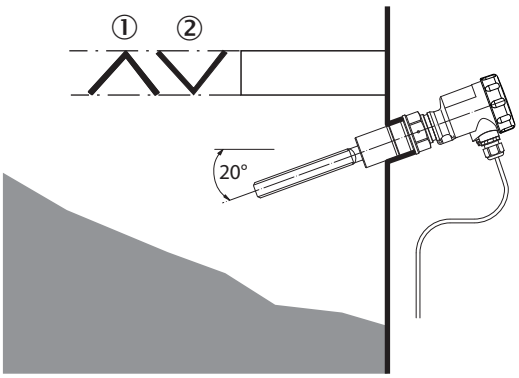

① Protective sheet
② Concave protective sheet for abrasive solids

Recommended accessories

Other models and accessories ➜ www.sick.com/LBV3xx

	Brief description	Type	part no.
Mounting systems			
	• **Description:** Locking screw connection, process pressure –1 bar to 16 bar, process connection G 2 A, inner thread G 1 1/2 A • **Material:** Stainless steel • **Details:** Stainless steel 316L	BEF-MU-316G20-ALBV	5322462

	Brief description	Type	part no.
Power supply units and power supply cables			
	• **Description:** Double relay (DPDT): 20 V DC ... 72 V DC / 20 ... 250 V AC	ECD-RE-LB-VREL-0001	6038666

SICK AT A GLANCE

SICK is one of the leading manufacturers of intelligent sensors and sensor solutions for industrial applications. A unique range of products and services creates the perfect basis for controlling processes securely and efficiently, protecting individuals from accidents and preventing damage to the environment.

We have extensive experience in a wide range of industries and understand their processes and requirements. With intelligent sensors, we can deliver exactly what our customers need. In application centers in Europe, Asia and North America, system solutions are tested and optimized in accordance with customer specifications. All this makes us a reliable supplier and development partner.

Comprehensive services complete our offering: SICK LifeTime Services provide support throughout the machine life cycle and ensure safety and productivity.

For us, that is "Sensor Intelligence."

WORLDWIDE PRESENCE:

Contacts and other locations –www.sick.com

SICK
Sensor Intelligence.