Data sheet

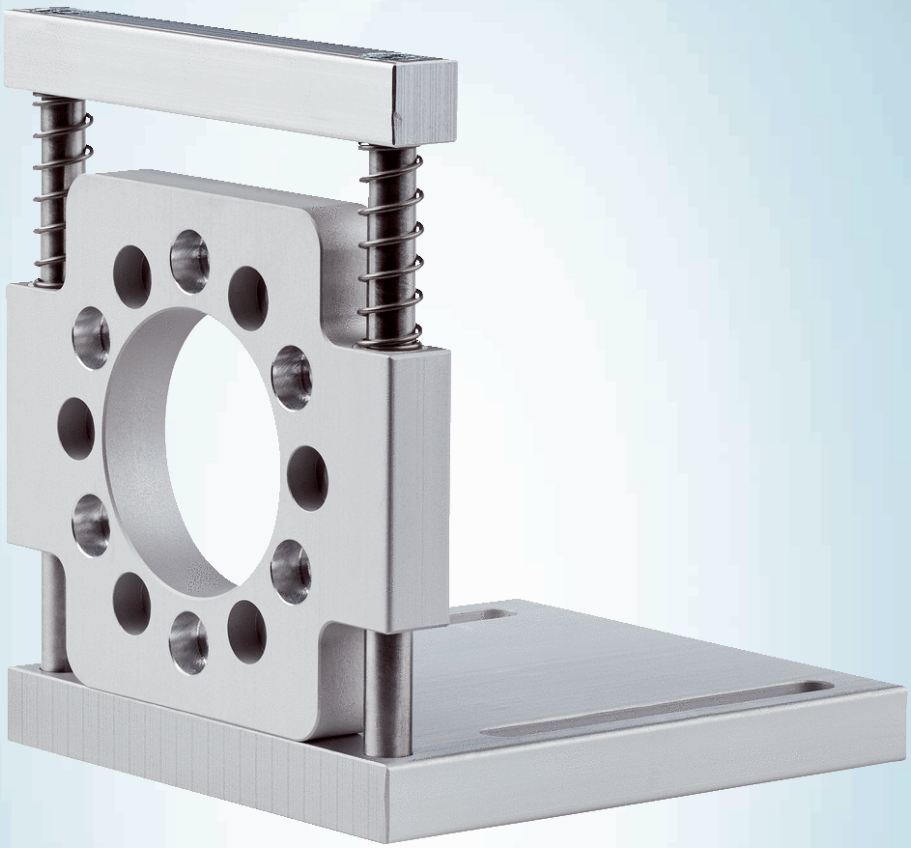

BEF-WF36F

Brackets

MOUNTING SYSTEMS

SICK
Sensor Intelligence.

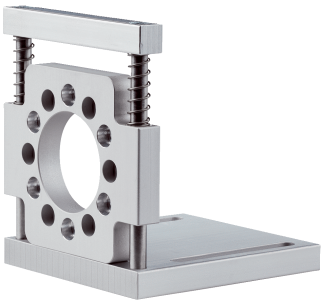

Ordering information

Type	part no.
BEF-WF36F	4084775

Other models and accessories ➜ www.sick.com/Brackets

Detailed technical data

Features

Accessory group	Mounting systems
Accessory family	Brackets
Description	Mounting angle spring-loaded, for flange with centerring collar 36 mm, working temperature range –40° ... +120°C
Material	Aluminum
Weight	+ 326 g
Mounting system type	Brackets

Classifications

ECLASS 5.0	27279202
ECLASS 5.1.4	27279202
ECLASS 6.0	27279202
ECLASS 6.2	27279202
ECLASS 7.0	27279202
ECLASS 8.0	27279202
ECLASS 8.1	27279202
ECLASS 9.0	27273701
ECLASS 10.0	27273701
ECLASS 11.0	27273701
ECLASS 12.0	27273701
ETIM 5.0	EC002615
ETIM 6.0	EC002615
ETIM 7.0	EC002615
ETIM 8.0	EC002615
UNSPSC 16.0901	32131023

Dimensional drawing

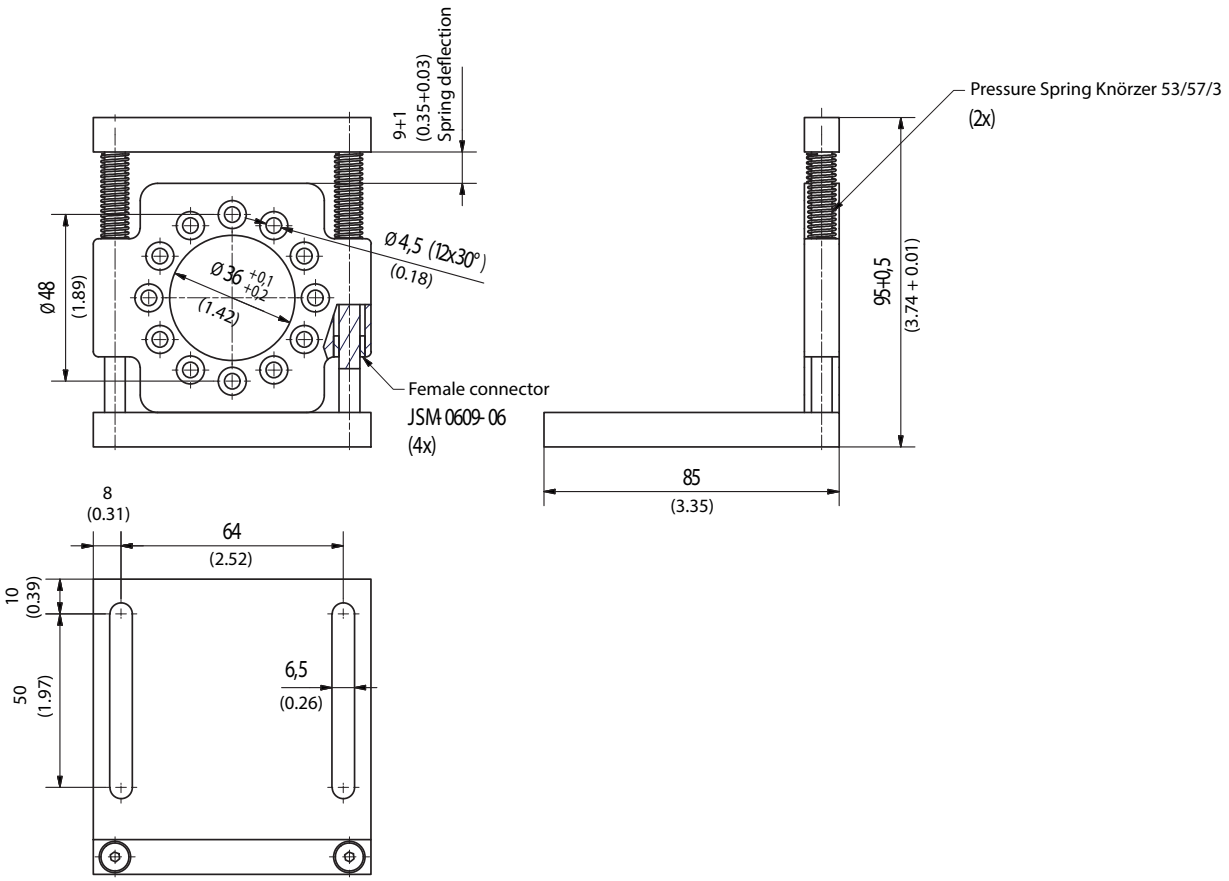

Dimensions in mm (inch)

SICK AT A GLANCE

SICK is one of the leading manufacturers of intelligent sensors and sensor solutions for industrial applications. A unique range of products and services creates the perfect basis for controlling processes securely and efficiently, protecting individuals from accidents and preventing damage to the environment.

We have extensive experience in a wide range of industries and understand their processes and requirements. With intelligent sensors, we can deliver exactly what our customers need. In application centers in Europe, Asia and North America, system solutions are tested and optimized in accordance with customer specifications. All this makes us a reliable supplier and development partner.

Comprehensive services complete our offering: SICK LifeTime Services provide support throughout the machine life cycle and ensure safety and productivity.

For us, that is "Sensor Intelligence."

WORLDWIDE PRESENCE:

Contacts and other locations –www.sick.com

SICK
Sensor Intelligence.