Data sheet

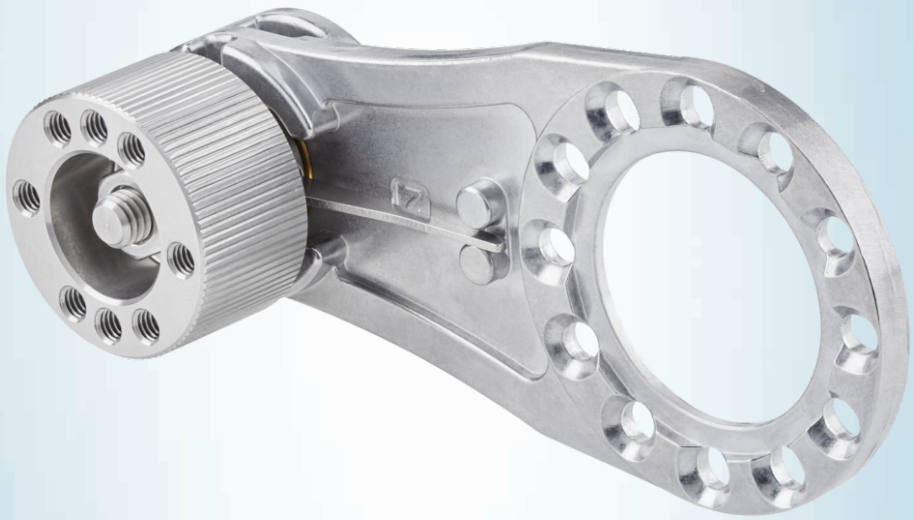

BEF-MWS075-ARM

Measuring wheel mechanics

MEASURING WHEELS AND MEASURING WHEEL MECHANICS

SICK
Sensor Intelligence.

Ordering information

Type	part no.
BEF-MWS075-ARM	2145180

Other models and accessories → www.sick.com/Measuring_wheel_mechanics

Detailed technical data

Features

Product segment	Measuring wheels and measuring wheel mechanics
Product	Measuring wheel mechanics
Description	Spring arm for linear measurement of material movement and speed with contact. Spring contact pressure manually adjustable without tools in one step to a constant 14 N contact pressure. Can be combined with separately available encoders and measuring wheels – see MWS075.
Product version	Spring arm rotary mounted

Classifications

ECLASS 5.0	21160104
ECLASS 5.1.4	21160104
ECLASS 6.0	21160104
ECLASS 6.2	21160104
ECLASS 7.0	21160104
ECLASS 8.0	21160104
ECLASS 8.1	21160104
ECLASS 9.0	21160104
ECLASS 10.0	21160104
ECLASS 11.0	21160104
ECLASS 12.0	21160104
ETIM 5.0	EC002179
ETIM 6.0	EC002179
ETIM 7.0	EC002179
ETIM 8.0	EC002179
UNSPSC 16.0901	25191839

Dimensional drawing

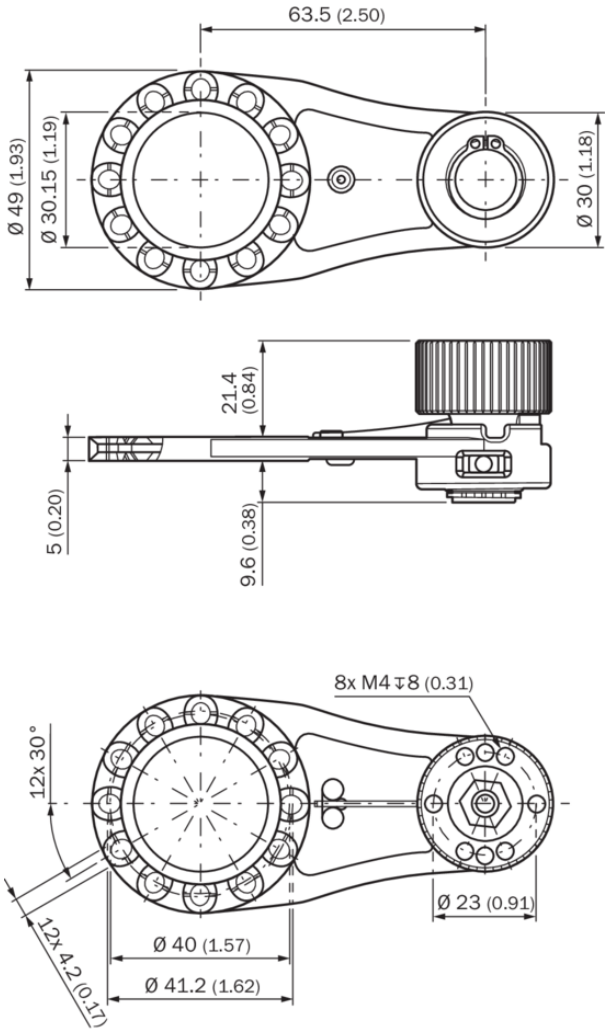

Dimensions in mm (inch)

SICK AT A GLANCE

SICK is one of the leading manufacturers of intelligent sensors and sensor solutions for industrial applications. A unique range of products and services creates the perfect basis for controlling processes securely and efficiently, protecting individuals from accidents and preventing damage to the environment.

We have extensive experience in a wide range of industries and understand their processes and requirements. With intelligent sensors, we can deliver exactly what our customers need. In application centers in Europe, Asia and North America, system solutions are tested and optimized in accordance with customer specifications. All this makes us a reliable supplier and development partner.

Comprehensive services complete our offering: SICK LifeTime Services provide support throughout the machine life cycle and ensure safety and productivity.

For us, that is "Sensor Intelligence."

WORLDWIDE PRESENCE:

Contacts and other locations –www.sick.com

SICK
Sensor Intelligence.