Data sheet

WLA4SP-1H165130A00

W4

PHOTOELECTRIC SENSORS

SICK
Sensor Intelligence.

Illustration may differ

Ordering information

Type	part no.
WLA4SP-1H165130A00	1140055

Other models and accessories → www.sick.com/W4

Detailed technical data

Features

Functional principle	Photoelectric retro-reflective sensor
Functional principle detail	Without reflector minimum distance (autocollimation/coaxial optics)
Sensing range	
Sensing range min.	0 m
Sensing range max.	7.1 m
Maximum distance range from reflector to sensor (operating reserve 1)	0 m ... 7.1 m
Recommended distance range from reflector to sensor (operating reserve 3,75)	0 m ... 5 m
Reference reflector	Reflector PL80
Recommended sensing range for the best performance	0 m ... 5 m
Polarisation filters	Yes
Emitted beam	
Light source	PinPoint LED
Type of light	Visible red light
Shape of light spot	Point-shaped
Light spot size (distance)	150 mm (5 m)
Maximum dispersion of the emitted beam around the standardized transmission axis (squint angle)	< +/- 1.5° (at Ta = +23 °C)
Key LED figures	
Normative reference	EN 62471:2008-09 | IEC 62471:2006, modified
LED risk group marking	Free group
Wave length	635 nm
Average service life	100,000 h at T_a = +25 °C

Adjustment	
Teach-in button	BluePilot: for sensitivity adjustment
IO-Link	For configuring the sensor parameters and Smart Task functions
Display	
LED blue	BluePilot: Alignment aid
LED green	Operating indicator Static on: power on Flashing: IO-Link mode
LED yellow	Status of received light beam Static on: object not present Static off: object present Flashing: Below the 1.5 function reserve
Special features	Pin2 pre-setting (MF): alarm output
Special applications	Detecting objects wrapped in film

Safety-related parameters

$MTTF_D$	1,601 years
DC_{avg}	0%

Communication interface

IO-Link	✓ , IO-Link V1.1
Data transmission rate	COM2 (38,4 kBaud)
Cycle time	2.3 ms
Process data length	16 Bit
Process data structure	Bit 0 = switching signal Q_{L1}
	Bit 1 = switching signal Q_{L2}
	Bit 2 ... 15 = Current receiver level (live)
VendorID	26
DeviceID HEX	0x800358
DeviceID DEC	8389464
Compatible master port type	A
SIO mode support	Yes

Electronics

Supply voltage U_B	10 V DC ... 30 V DC [1]
Ripple	≤ 5 V_{pp}
Usage category	DC-12 (According to EN 60947-5-2) DC-13 (According to EN 60947-5-2)
Current consumption	≤ 20 mA, without load. At U_B = 24 V
Protection class	III
Digital output	
Number	2
Type	Push-pull: PNP/NPN
Switching mode	Light switching

[1] Limit values.
[2] This switching output must not be connected to another output.

Signal voltage PNP HIGH/LOW	Approx. U_B-2.5 V / 0 V
Signal voltage NPN HIGH/LOW	Approx. U_B / < 2.5 V
Output current $I_{max.}$	≤ 100 mA
Circuit protection outputs	Reverse polarity protected
	Overcurrent protected
	Short-circuit protected
Response time	≤ 500 µs
Repeatability (response time)	150 µs
Switching frequency	1,000 Hz
Pin/Wire assignment	
Function of pin 4/black (BK)	Digital output, light switching, object present → output Q_{L1} LOW [2]
	IO-Link communication C
Function of pin 4/black (BK) – detail	The pin 4 function of the sensor can be configured
	Additional possible settings via IO-Link
Function of pin 2/white (WH)	Alarm output [2]
Function of pin 2/white (WH) – detail	The pin 2 function of the sensor can be configured
	Additional possible settings via IO-Link

[1] Limit values.
[2] This switching output must not be connected to another output.

Mechanics

Housing	Rectangular
Design detail	Slim
Dimensions (W x H x D)	12.1 mm x 41.9 mm x 18.6 mm
Connection	Cable, 4-wire, 2 m
Connection detail	
Deep-freeze property	Do not bend below 0 °C
Conductor size	0.14 mm²
Cable diameter	Ø 3.4 mm
Length of cable (L)	2 m
Material	
Housing	Plastic, VISTAL®
Front screen	Plastic, PMMA
Cable	Plastic, PVC
Maximum tightening torque of the fixing screws	0.4 Nm

Ambient data

Enclosure rating	IP66 (EN 60529) IP67 (EN 60529)
Ambient operating temperature	–40 °C ... +60 °C
Ambient temperature, storage	–40 °C ... +75 °C
Typ. Ambient light immunity	Artificial light: ≤ 50,000 lx Sunlight: ≤ 50,000 lx

Shock resistance	30 g, 11 ms (3 positive and 3 negative shocks along X, Y, Z axes, 18 total shocks (EN60068-2-27))
Vibration resistance	10 Hz ... 1,000 Hz (Amplitude 1 mm, 3 x 30 min (EN60068-2-6))
Air humidity	35 % ... 95 %, relative humidity (no condensation)
Electromagnetic compatibility (EMC)	EN 60947-5-2
Resistance to cleaning agent	ECOLAB
UL File No.	NRKH.E181493 & NRKH7.E181493

Smart Task

Smart Task name	Base logics
Logic function	Direct AND OR
Timer function	Deactivated Switch-on delay Off delay ON and OFF delay Impulse (one shot)
Inverter	Yes
Switching frequency	SIO Logic: 800 Hz [1)]
Response time	SIO Logic: 600 µs [1)]
Repeatability	SIO Logic: 200 µs [1)]
Switching signal	
Switching signal Q_{L1}	Switching output
Switching signal $\bar{Q}_{L1}$	Switching output

[1)] Use of Smart Task functions without IO-Link communication (SIO mode).

Diagnosis

Device temperature	
Measuring range	Very cold, cold, moderate, warm, hot
Device status	Yes
Detailed device status	Yes
Operating hour counter	Yes
Operating hours counter with reset function	Yes
Quality of teach	Yes
Quality of run	Yes, Contamination display

Certificates

EU declaration of conformity	✓
UK declaration of conformity	✓
ACMA declaration of conformity	✓
Moroccan declaration of conformity	✓
China RoHS	✓
cULus certificate	✓
Information according to Art. 3 of Data Act (Regulation EU 2023/2854)	✓

Classifications

ECLASS 5.0	27270902
ECLASS 5.1.4	27270902
ECLASS 6.0	27270902
ECLASS 6.2	27270902
ECLASS 7.0	27270902
ECLASS 8.0	27270902
ECLASS 8.1	27270902
ECLASS 9.0	27270902
ECLASS 10.0	27270902
ECLASS 11.0	27270902
ECLASS 12.0	27270902
ETIM 5.0	EC002717
ETIM 6.0	EC002717
ETIM 7.0	EC002717
ETIM 8.0	EC002717
UNSPSC 16.0901	39121528

display and adjustment elements

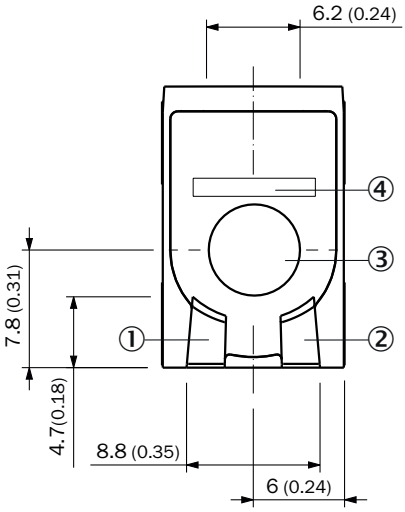

① LED green
② LED yellow
③ Teach-in button
④ LED blue

Connection type Cable, 4-wire

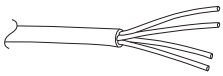

Connection diagram Cd-572

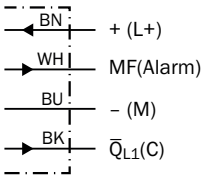

Truth table Push-pull: PNP/NPN - light switching Q

	Light switching Q (normally closed (upper switch), normally open (lower switch))	
	Object not present ➜ Output HIGH	Object present ➜ Output LOW
Light receive	✓	✗
Light receive indicator	●	✗
Load resistance to L+	✗	⚠
Load resistance to M	⚠	✗
	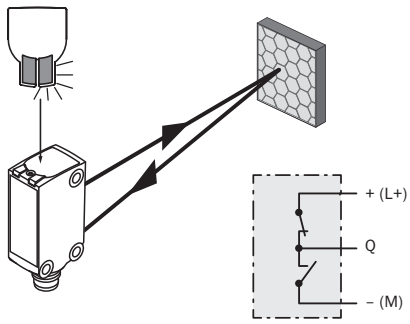	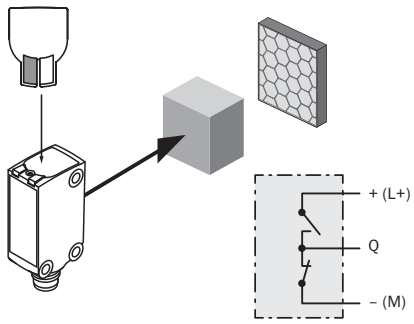

Characteristic curve Standard reflectors

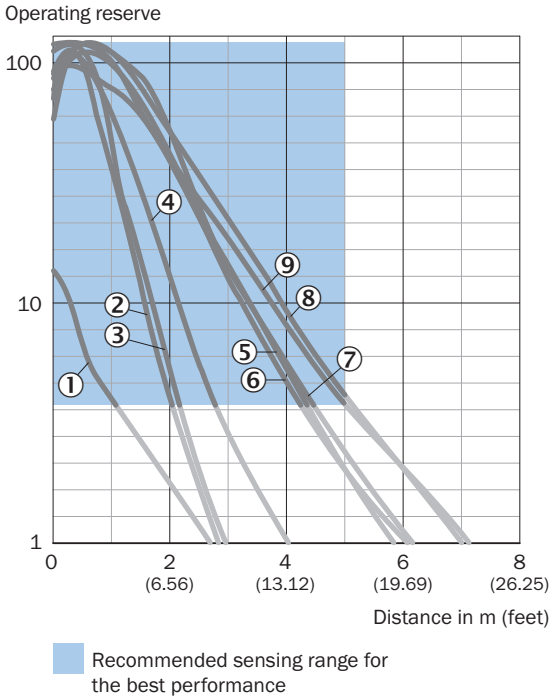

① Reflector PL40A Antifog
② Reflector PL20A
③ reflector PL22-2
④ Reflector P250H
⑤ Reflector P250
⑥ Reflector PL30A
⑦ Reflector PL40A
⑧ Reflector C110A
⑨ Reflector PL80A

Characteristic curve Reflective tape

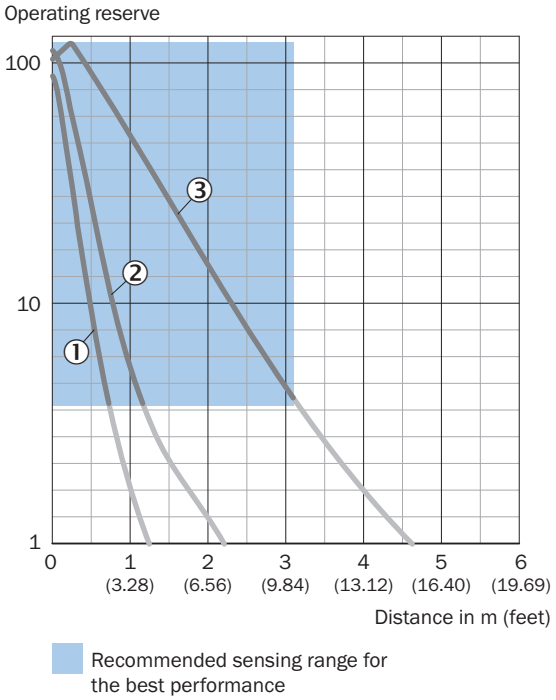

① Reflective tape REF-DG
② Reflective tape REF-IRF-56
③ Reflective tape REF-AC1000

Characteristic curve Fine triple reflectors

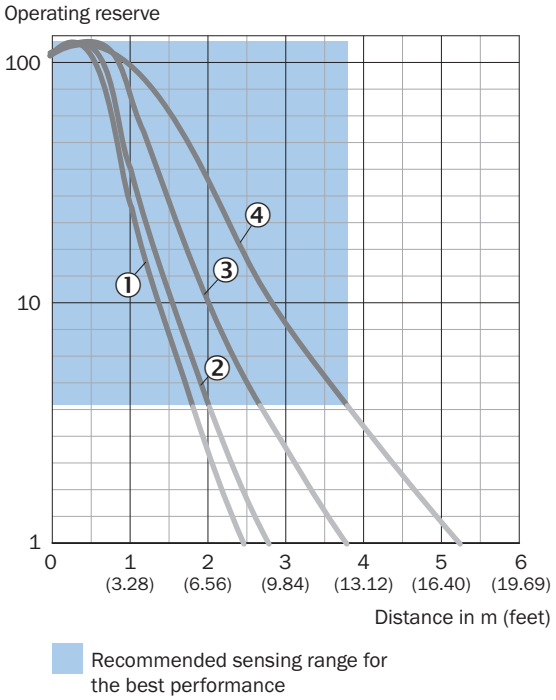

① PL10F reflector
② PL10FH-1 reflector

③ Reflector PL20F
④ Reflector P250F

Characteristic curve Chemical-resistant reflectors

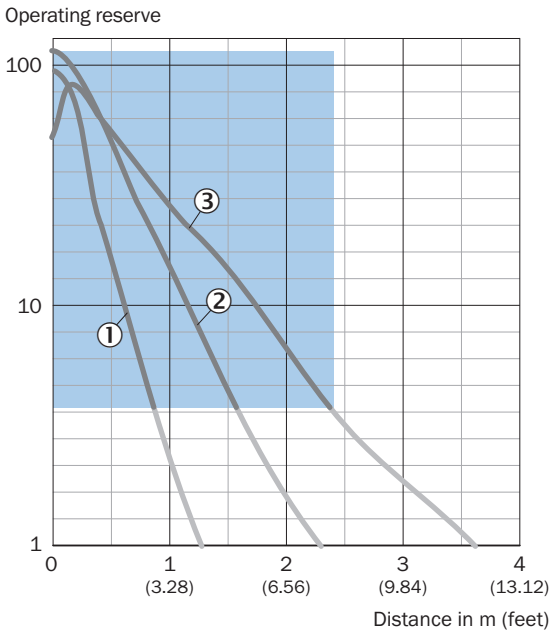

① PL10F CHEM reflector
② Reflector PL20 CHEM
③ Reflector P250 CHEM

Light spot size

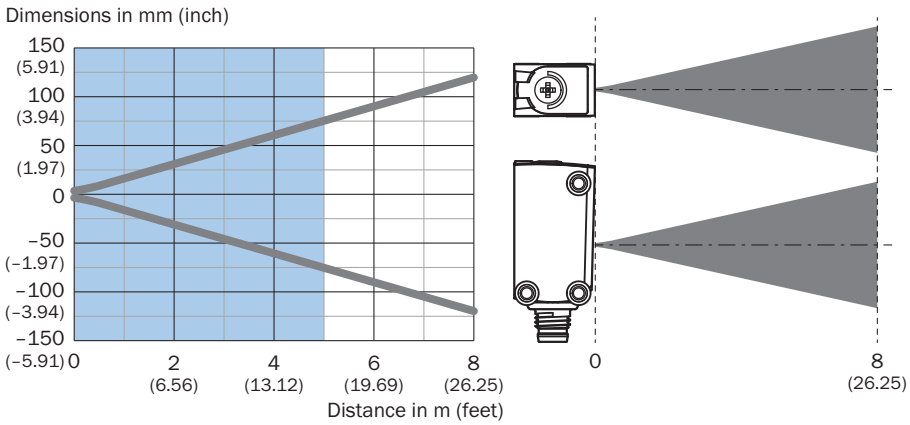

Sensing range diagram Standard reflectors

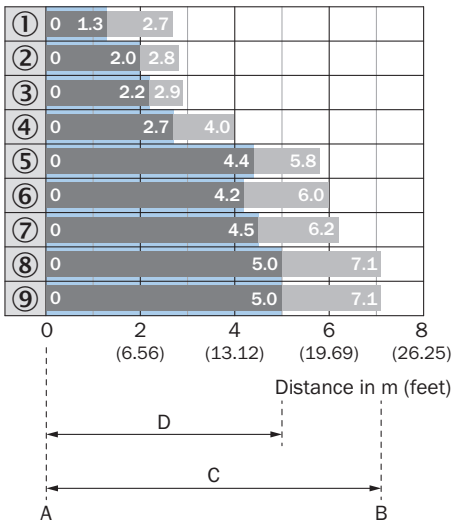

Recommended sensing range for the best performance

1	Reflector PL40A Antifog
2	Reflector PL20A
3	Reflector PL22-2
4	Reflector P250H
5	Reflector P250
6	Reflector PL30A
7	Reflector PL40A
8	Reflector C110A
9	Reflector PL80A
A	Sensing range min. in m
B	Sensing range max. in m
C	Maximum distance range from reflector to sensor (operating reserve 1)
D	Recommended distance range from reflector to sensor (operating reserve 3,75)

Sensing range diagram Reflective tape

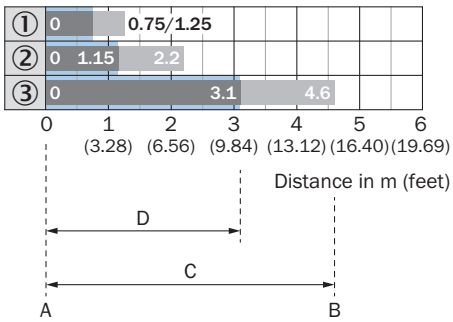

Recommended sensing range for the best performance

1	Reflective tape REF-DG
2	Reflective tape REF-IRF-56
3	Reflective tape REF-AC1000
A	Sensing range min. in m
B	Sensing range max. in m
C	Maximum distance range from reflector to sensor (operating reserve 1)
D	Recommended distance range from reflector to sensor (operating reserve 3,75)

Sensing range diagram Fine triple reflectors

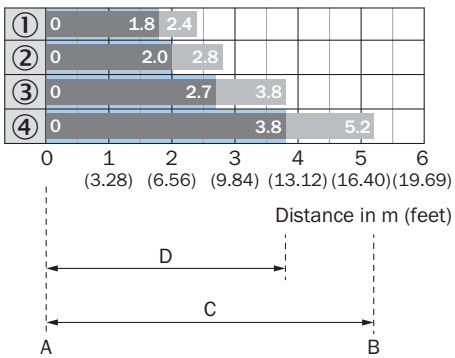

Recommended sensing range for the best performance

1	PL10F reflector
2	PL10FH-1 reflector
3	Reflector PL20F
4	Reflector P250F
A	Sensing range min. in m
B	Sensing range max. in m
C	Maximum distance range from reflector to sensor (operating reserve 1)

D	Recommended distance range from reflector to sensor (operating reserve 3,75)

Sensing range diagram Chemical-resistant reflectors

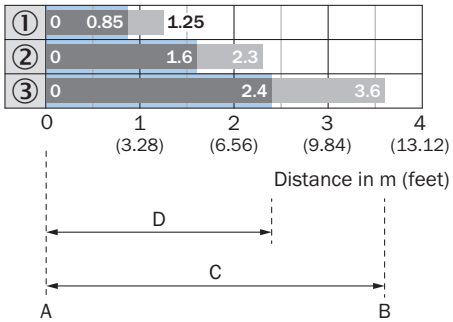

Recommended sensing range for the best performance

1	PL10F CHEM reflector
2	Reflector PL20 CHEM
3	Reflector P250 CHEM
A	Sensing range min. in m
B	Sensing range max. in m
C	Maximum distance range from reflector to sensor (operating reserve 1)
D	Recommended distance range from reflector to sensor (operating reserve 3,75)

Dimensional drawing, sensor

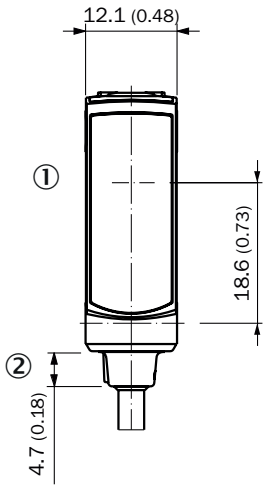

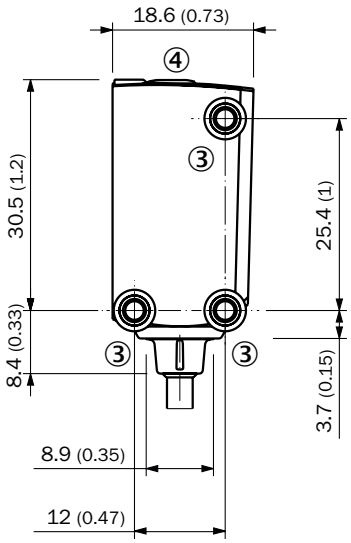

Dimensions in mm (inch)

① Center of optical axis
② Connection
③ M3 mounting hole
④ display and adjustment elements

Recommended accessories

Other models and accessories ➜ www.sick.com/W4

	Brief description	Type	part no.
reflectors and optics			
	• **Description:** Rectangular, screw connection • **Dimensions:** 84 mm 84 mm • **Ambient operating temperature:** –30 °C ... +65 °C	PL80A	1003865
Mounting systems			
	• **Description:** Plate N08 for universal clamp bracket • **Material:** Steel, zinc diecast • **Details:** Zinc plated steel (sheet), Zinc die cast (clamping bracket) • **Items supplied:** Universal clamp (5322626), mounting hardware • **Usable for:** W100, W150, W4S, W4F, W8, W9-3, W8G, W8 Laser, W8 Inox, G6, W100 Laser, W100-2, W10, G6 Inox, RAY10, W4SLG-3, W9, GR18, MultiPulse, Reflex Array, MultiLine, LUT3, KT5, KT8, KT10, CS8	BEF-KHS-N08	2051607
	• **Material:** Stainless steel • **Details:** Stainless steel (1.4301) • **Suitable for:** W4S, W4S	BEF-WN-G6	2062909
connectors and cables			
	• **Connection type head A:** Male connector, M8, 4-pin, straight, A-coded • **Description:** Unshielded • **Connection systems:** Screw-type terminals • **Permitted cross-section:** 0.14 mm² ... 0.5 mm²	STE-0804-G	6037323
	• **Connection type head A:** Male connector, M12, 4-pin, straight, A-coded • **Description:** Unshielded • **Connection systems:** Screw-type terminals • **Permitted cross-section:** ≤ 0.75 mm²	STE-1204-G	6009932

SICK AT A GLANCE

SICK is one of the leading manufacturers of intelligent sensors and sensor solutions for industrial applications. A unique range of products and services creates the perfect basis for controlling processes securely and efficiently, protecting individuals from accidents and preventing damage to the environment.

We have extensive experience in a wide range of industries and understand their processes and requirements. With intelligent sensors, we can deliver exactly what our customers need. In application centers in Europe, Asia and North America, system solutions are tested and optimized in accordance with customer specifications. All this makes us a reliable supplier and development partner.

Comprehensive services complete our offering: SICK LifeTime Services provide support throughout the machine life cycle and ensure safety and productivity.

For us, that is "Sensor Intelligence."

WORLDWIDE PRESENCE:

Contacts and other locations –www.sick.com

SICK
Sensor Intelligence.