Data sheet

IMX12-09BNSZU2S

IMX

INDUCTIVE PROXIMITY SENSORS

SICK
Sensor Intelligence.

Illustration may differ

Ordering information

Type	part no.
IMX12-09BNSZU2S	1134185

Included in delivery: BEF-MU-M12 (1)

Other models and accessories → www.sick.com/IMX

Detailed technical data

Features

Housing	Metric
Housing	Standard design
Thread size	M12 x 1
Diameter	Ø 12 mm
Sensing range S_n	9 mm
Safe sensing range S_a	7.29 mm
Installation type	Quasi-flush
Switching frequency	25 Hz
Connection type	Cable, 3-wire, 2 m
Switching output	NPN
Switching output detail	NPN
Output function	NO
Electrical wiring	DC 3-wire
Enclosure rating	IP68 [1]
Special features	Quadruple sensing range, Resistant against coolant lubricants, Visual adjustment indicator
Special applications	Zones with coolants and lubricants
Items supplied	Mounting nut, brass, nickel-plated (2x)

[1] According to EN 60529.

Mechanics/electronics

Supply voltage	10 V DC ... 30 V DC
Ripple	≤ 10 %
Voltage drop	≤ 2 V [1]

[1] At I_a max.

[2] Supply voltage U_B and constant ambient temperature Ta.

[3] Of Sr.

Time delay before availability	≤ 150 ms
Hysteresis	5 % ... 15 %
Reproducibility	≤ 5 % [2] [3]
Temperature drift (of S_r)	± 10 %
EMC	According to EN 60947-5-2
Continuous current I_a	≤ 200 mA
No load current	≤ 50 mA
Cable material	PUR
Conductor size	0.34 mm²
Cable diameter	Ø 4.5 mm
Short-circuit protection	✓
Power-up pulse protection	✓
Shock and vibration resistance	30 g, 11 ms / 10 ... 55 Hz, 1 mm
Display	
LED yellow	Output state (on/off)
LED green	Stable on/off state
Ambient operating temperature	–25 °C ... +75 °C
Housing material	Nickel-plated brass
Sensing face material	Plastic, LCP
Housing length	58.1 mm
Thread length	54.1 mm
Tightening torque, max.	≤ 12 Nm
Protection class	III
UL File No.	E181493
Service interface	IO-Link as a service interface. The interface can only be used by SICK Service.

[1] At I_a max.
[2] Supply voltage U_B and constant ambient temperature Ta.
[3] Of Sr.

Safety-related parameters

$MTTF_D$	411 years
DC_{avg}	0 %
T_M (mission time)	20 years

Reduction factors

Note	The values are reference values which may vary
St37 steel (Fe)	1
Stainless steel (V2A, 304)	0.6
Aluminum (Al)	0.4
Copper (Cu)	0.3
Brass (Br)	0.5

Installation note

Remark	Associated graphic see "Installation"
A	14 mm
B	12 mm
C	12 mm
D	27 mm
E	6 mm
F	27 mm

Certificates

EU declaration of conformity	✓
UK declaration of conformity	✓
ACMA declaration of conformity	✓
Moroccan declaration of conformity	✓
China RoHS	✓
cULus certificate	✓
Information according to Art. 3 of Data Act (Regulation EU 2023/2854)	✓

Classifications

ECLASS 5.0	27270101
ECLASS 5.1.4	27270101
ECLASS 6.0	27270101
ECLASS 6.2	27270101
ECLASS 7.0	27270101
ECLASS 8.0	27270101
ECLASS 8.1	27270101
ECLASS 9.0	27270101
ECLASS 10.0	27270101
ECLASS 11.0	27270101
ECLASS 12.0	27274001
ETIM 5.0	EC002714
ETIM 6.0	EC002714
ETIM 7.0	EC002714
ETIM 8.0	EC002714
UNSPSC 16.0901	39122230

Installation note Quasi-flush installation

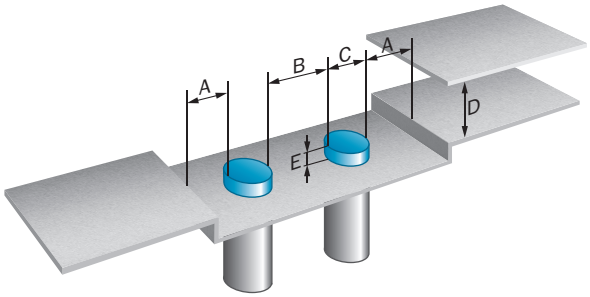

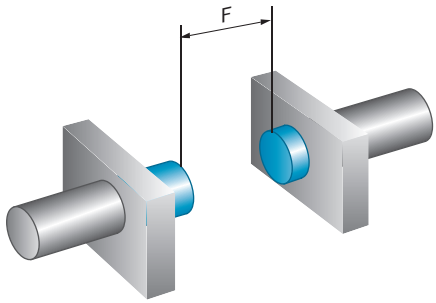

Connection diagram Cd-001

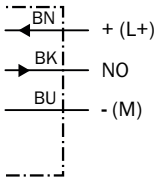

Response diagram

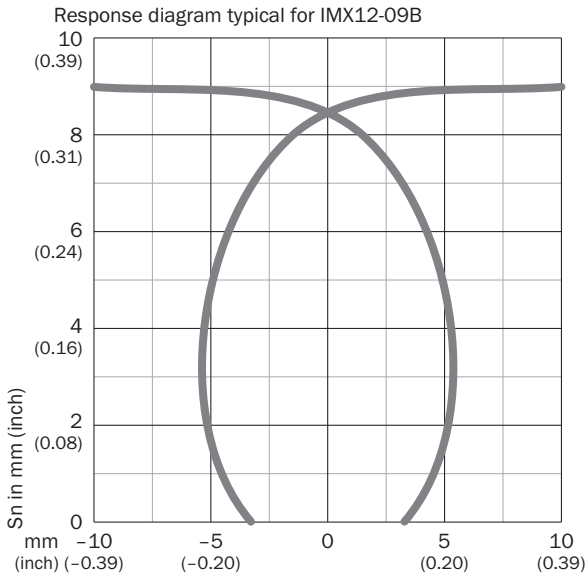

All dimensions in mm (inch)

Functional principle Installation aid

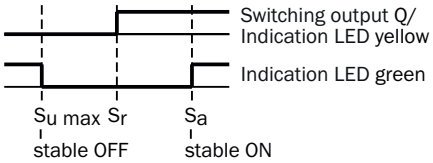

LED indicator green	LED indicator yellow	Status
ON	OFF	Output is deactivated (OFF), sensor in stable OFF state
OFF	OFF	Output is deactivated (OFF), no object detected
OFF	ON	Output is activated (ON), object detected
ON	ON	Output is activated (ON), sensor in stable ON state

Dimensional drawing IMX12, standard variant, cable, quasi-flush

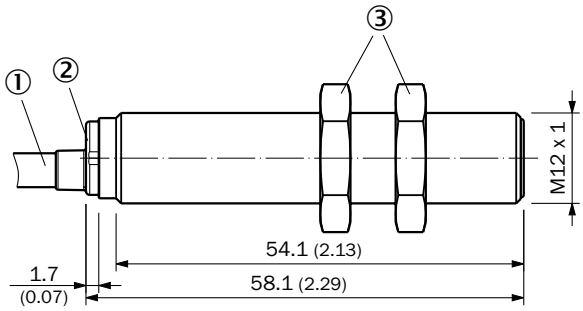

Dimensions in mm (inch)
① Connection
② Display LED
③ fastening nuts (2x); width across 17, brass nickel-plated

Recommended accessories

Other models and accessories ➜ www.sick.com/IMX

	Brief description	Type	part no.
connectors and cables			
	• **Connection type head A:** Male connector, M12, 4-pin, straight, A-coded • **Description:** Unshielded • **Connection systems:** Screw-type terminals • **Permitted cross-section:** ≤ 0.75 mm² • **Application:** Hygienic and washdown zones	STE-1204-GN	6028359
	• **Connection type head A:** Female connector, M12, 4-pin, straight, A-coded • **Description:** Unshielded • **Connection systems:** Screw-type terminals • **Permitted cross-section:** ≤ 0.75 mm² • **Application:** Hygienic and washdown zones	DOS-1204-GN	6028357
	• **Connection type head A:** Female connector, M12, 4-pin, angled, A-coded • **Description:** Unshielded • **Connection systems:** Screw-type terminals • **Permitted cross-section:** ≤ 0.75 mm² • **Application:** Hygienic and washdown zones	DOS-1204-WN	6028358
Mounting systems			
	• **Description:** Mounting plate for M12 sensors • **Material:** Steel • **Details:** Steel, zinc coated • **Items supplied:** Without mounting hardware	BEF-WG-M12	5321869
	• **Description:** Mounting bracket for M12 sensors • **Material:** Steel • **Details:** Steel, zinc coated • **Items supplied:** Without mounting hardware	BEF-WN-M12	5308447

SICK AT A GLANCE

SICK is one of the leading manufacturers of intelligent sensors and sensor solutions for industrial applications. A unique range of products and services creates the perfect basis for controlling processes securely and efficiently, protecting individuals from accidents and preventing damage to the environment.

We have extensive experience in a wide range of industries and understand their processes and requirements. With intelligent sensors, we can deliver exactly what our customers need. In application centers in Europe, Asia and North America, system solutions are tested and optimized in accordance with customer specifications. All this makes us a reliable supplier and development partner.

Comprehensive services complete our offering: SICK LifeTime Services provide support throughout the machine life cycle and ensure safety and productivity.

For us, that is "Sensor Intelligence."

WORLDWIDE PRESENCE:

Contacts and other locations –www.sick.com

SICK
Sensor Intelligence.