Data sheet

DFV60A-2ZPC00S14

DFV60

MEASURING WHEEL ENCODERS

SICK
Sensor Intelligence.

Illustration may differ

Ordering information

Type	part no.
DFV60A-2ZPC00S14	1130709

Other models and accessories ➜ www.sick.com/DFV60

Detailed technical data

Features

Special device	✓
Specialty	DFV60A-22PC65536 with BEF-MR10300AP (2118512) measuring wheel Pulses per revolution: preprogrammed to 8192 Preprogrammed with TTL setting
Standard reference device	DFV60A-22PC65536, 1051309
Items supplied	DFV60 spring arm (part number: 2056155) not included with delivery

Safety-related parameters

$MTTF_D$ (mean time to dangerous failure)	300 years (EN ISO 13849-1) [1]

[1] This product is a standard product and does not constitute a safety component as defined in the Machinery Directive. Calculation based on nominal load of components, average ambient temperature 40 °C, frequency of use 8760 h/a. All electronic failures are considered hazardous. For more information, see document no. 8015532.

Performance

Pulses per revolution	8,192
Resolution in pulses/mm	27.32 Pulses/mm [1]
Measuring increment (resolution in mm/pulse)	0.0366 mm/pulse [2]
Measuring step deviation	± 0.002° [3]
Error limits	± 4 mm/m, subject to measuring wheel (measuring wheel surface + measuring surface + ambient conditions)
Initialization time	30 ms

[1] Calculation example: Pulses per revolution / measuring wheel circumference = 16,384 pulses per revolution / 200 mm = 81.92 pulses/mm.
[2] Calculation example: Circumference of wheel / pulses per revolution = 200 mm / 16384 pulses per revolution = 0,012mm/pulse.
[3] Value refers to the mounted encoder.

Interfaces

Communication interface	Incremental

Communication Interface detail	TTL / HTL
Programmable/configurable	✓

Electronics

Connection type	Male connector, M12, 8-pin, radial
Power consumption max. without load	≤ 30 mA
Supply voltage	4.5 V ... 32 V
Load current max.	30 mA
Maximum output frequency	820 kHz
Reference signal, number	1
Reference signal, position	90°, electric, logically gated with A and B
Reverse polarity protection	✓
Short-circuit protection of the outputs	✓

Mechanics

Measuring wheel circumference	300 mm
Measuring wheel surface	O-ring NBR70 [1)]
Mass	+ 500 g
Encoder material	
Shaft	Stainless steel
Flange	Aluminum
Housing	Aluminum
Cable	PUR
Spring arm mechanism material	
Spring element	Not contained in the scope of delivery of the system
Measuring wheel core	Aluminum
Start up torque	0.8 Ncm (at 20 °C)
Operating torque	0.6 Ncm (at 20 °C)
Operating speed	1,500 min^{-1}
Maximum operating speed	3,000 min^{-1} [2)]
Bearing lifetime	3 x 10^9 revolutions
Maximum travel/deflection of spring arm	40 mm
Max. permissible working area for the spring (continuous operation)	± 10 mm
Recommended spring deflection	20 mm ... 40 mm
Mounting position relative to the measuring object	Preferably from above, from below possible

[1)] The surface of a measuring wheel is subject to wear. This depends on contact pressure, acceleration behavior in the application, traversing speed, measurement surface, mechanical alignment of the measuring wheel, temperature, and ambient conditions. We recommend you regularly check the condition of the measuring wheel and replace as required.
[2)] Allow for self-heating of 3.3 K per 1,000 rpm when designing the operating temperature range.

Ambient data

EMC	According to EN 61000-6-2 and EN 61000-6-4
Enclosure rating	IP65

Permissible relative humidity	90 % (Condensation not permitted)
Operating temperature range	–20 °C ... +100 °C
Storage temperature range	–40 °C ... +100 °C, without package
Resistance to shocks	70 g, 6 ms (EN 60068-2-27)
Resistance to vibration	30 g, 10 Hz ... 2,000 Hz (EN 60068-2-6)

Classifications

ECLASS 5.0	27270501
ECLASS 5.1.4	27270501
ECLASS 6.0	27270590
ECLASS 6.2	27270590
ECLASS 7.0	27270501
ECLASS 8.0	27270501
ECLASS 8.1	27270501
ECLASS 9.0	27270501
ECLASS 10.0	27270790
ECLASS 11.0	27270707
ECLASS 12.0	27270504
ETIM 5.0	EC001486
ETIM 6.0	EC001486
ETIM 7.0	EC001486
ETIM 8.0	EC001486
UNSPSC 16.0901	41112113

Certificates

EU declaration of conformity	✓
UK declaration of conformity	✓
ACMA declaration of conformity	✓
Moroccan declaration of conformity	✓
China RoHS	✓
cULus certificate	✓
Information according to Art. 3 of Data Act (Regulation EU 2023/2854)	✓

Dimensional drawing

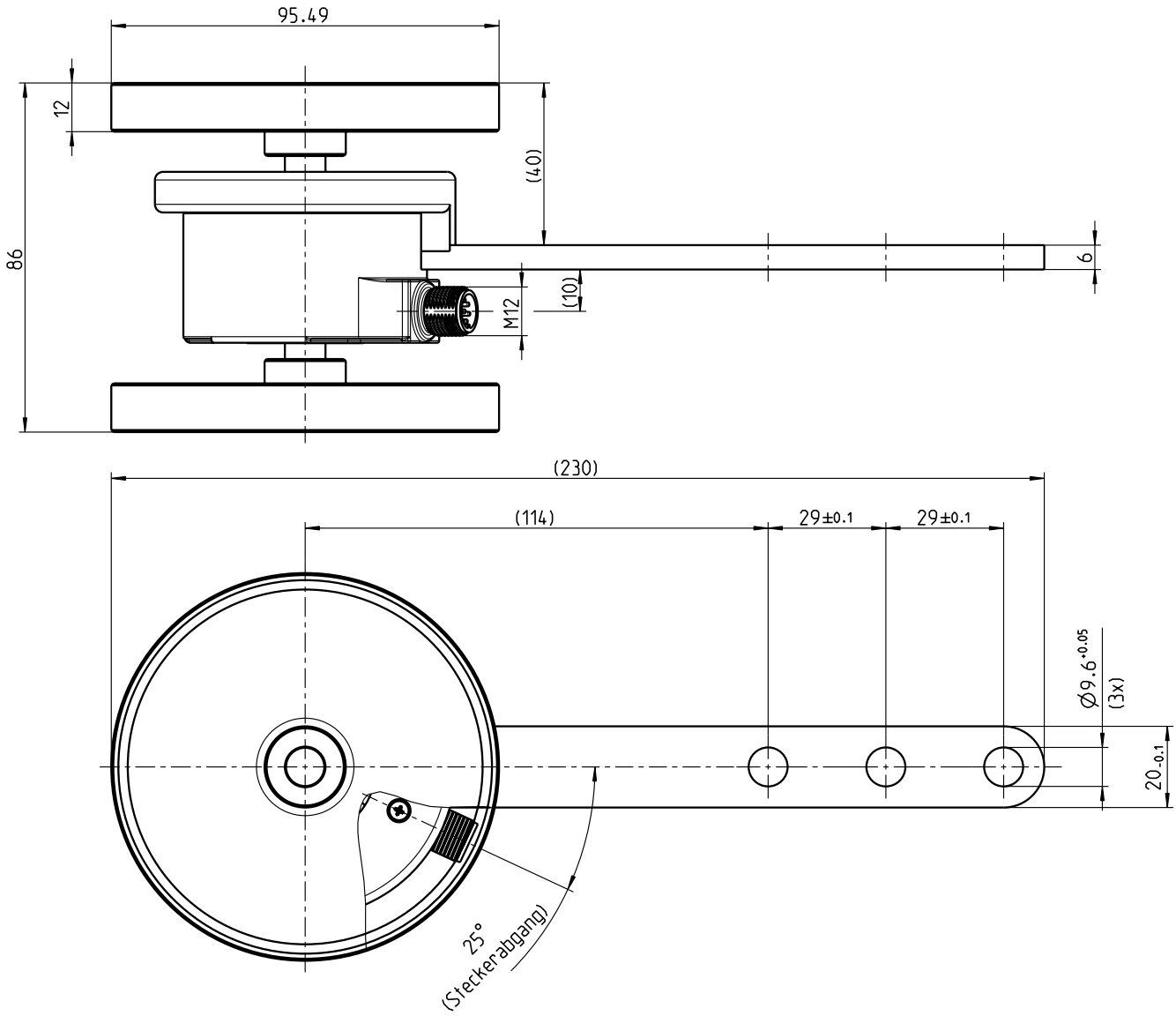

Dimensions in mm (inch)

Anschlussbelegung

Cable 8-core

View to the connector M12 fitted to the encoder body

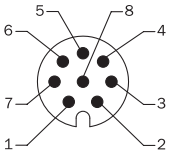

PIN, 8-pin, connector M12	Color of wires for encoders with cable outlet	Signal TTL, HTL	Explanation
1	Brown	$\overline{A}$	Signal line
2	White	A	Signal line
3	Black	$\overline{B}$	Signal line
4	Pink	B	Signal line
5	Yellow	$\overline{Z}$	Signal line
6	Lilac	Z	Signal line
7	Blue	GND	Ground connection of the encoder
8	Red	$+U_s$	Supply voltage (potential free to housing)
Screen	Screen	Screen	Screen connected to encoder housing. On the control side connected to earth.

Diagrams Dual wheel, spring tension, yoke mount

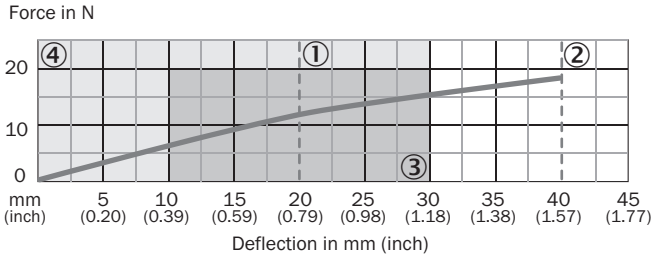

① recommended pre-tension (20 mm)
② maximum deflection (40 mm)
③ recommended deflection range (10 – 30 mm)
④ permissible working area (0 – 30 mm)

Diagrams

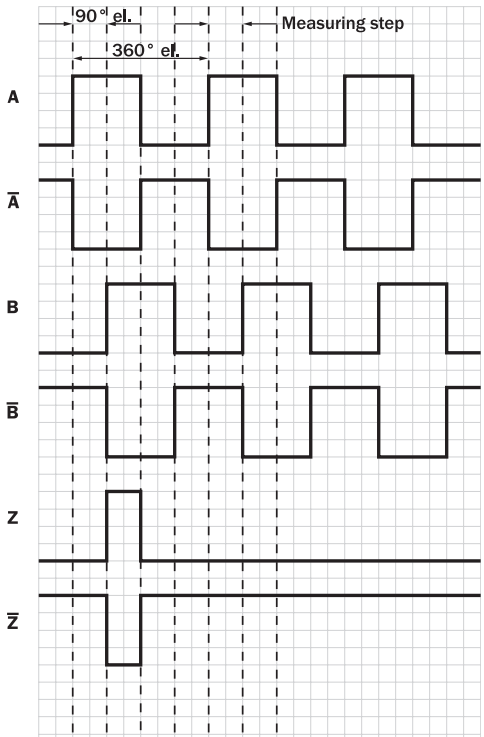

Recommended accessories

Other models and accessories ➜ www.sick.com/DFV60

	Brief description	Type	part no.
connectors and cables			
	• **Connection type head A:** Female connector, JST, 8-pin, straight • **Connection type head B:** Flying leads • **Signal type:** Incremental, SSI • **Items supplied:** JST including sealing • **Cable:** 0.5 m, 8-wire, PUR, halogen-free • **Description:** Incremental, shielded, SSI	DOL-0J08-G0M5AA3	2046873
	• **Connection type head A:** Female connector, JST, 8-pin, straight • **Connection type head B:** Flying leads • **Signal type:** Incremental • **Items supplied:** JST including sealing • **Cable:** 1.5 m, 8-wire, PUR, halogen-free • **Description:** Incremental, shielded	DOL-0J08-G1M5AA3	2046874
	• **Connection type head A:** Female connector, JST, 8-pin, straight • **Connection type head B:** Flying leads • **Signal type:** SSI, Incremental • **Items supplied:** JST including sealing • **Cable:** 1.5 m, 8-wire, PUR, halogen-free • **Description:** SSI, shielded, Incremental	DOL-0J08-G1M5AA6	2048590
	• **Connection type head A:** Female connector, JST, 8-pin, straight • **Connection type head B:** Flying leads • **Signal type:** Incremental, SSI • **Items supplied:** JST including sealing • **Cable:** 10 m, 8-wire, PUR, halogen-free • **Description:** Incremental, shielded, SSI	DOL-0J08-G10MAA3	2046877
	• **Connection type head A:** Female connector, JST, 8-pin, straight • **Connection type head B:** Flying leads • **Signal type:** SSI, Incremental • **Items supplied:** JST including sealing • **Cable:** 3 m, 8-wire, PUR, halogen-free • **Description:** SSI, shielded, Incremental	DOL-0J08-G3M0AA6	2048591
	• **Description:** Incremental, shielded, SSI • **Connection type head A:** Female connector, M12, 8-pin, straight • **Connection type head B:** Flying leads • **Signal type:** Incremental, SSI • **Cable:** 5 m, 8-wire, PUR, halogen-free • **Connection systems:** Flying leads • **Application:** Drag chain operation, Zones with oils and lubricants	DOL-1208-G05MAC1	6032867
	• **Description:** Incremental, shielded, SSI • **Connection type head A:** Female connector, M12, 8-pin, straight • **Connection type head B:** Flying leads • **Signal type:** Incremental, SSI • **Cable:** 10 m, 8-wire, PUR, halogen-free • **Connection systems:** Flying leads • **Application:** Drag chain operation, Zones with oils and lubricants	DOL-1208-G10MAC1	6032868
	• **Description:** Incremental, shielded, SSI • **Connection type head A:** Female connector, M12, 8-pin, straight • **Connection type head B:** Flying leads • **Signal type:** Incremental, SSI • **Cable:** 20 m, 8-wire, PUR, halogen-free • **Connection systems:** Flying leads • **Application:** Drag chain operation, Zones with oils and lubricants	DOL-1208-G20MAC1	6032869
	• **Description:** Incremental, shielded, SSI • **Connection type head A:** Female connector, M12, 8-pin, straight • **Connection type head B:** Flying leads • **Signal type:** Incremental, SSI • **Cable:** 25 m, 8-wire, PUR, halogen-free • **Connection systems:** Flying leads • **Application:** Drag chain operation, Zones with oils and lubricants	DOL-1208-G25MAC1	6067859
	• **Description:** Incremental, shielded • **Connection type head A:** Female connector, M23, 12-pin, straight • **Connection type head B:** Flying leads • **Signal type:** Incremental • **Cable:** 2 m, 11-wire, PUR	DOL-2312-G02MLA3	2030682

	Brief description	Type	part no.
	• **Application:** Zones with oils and lubricants		
	• **Description:** Incremental, shielded • **Connection type head A:** Female connector, M23, 12-pin, straight • **Connection type head B:** Flying leads • **Signal type:** Incremental • **Cable:** 3 m, 12-wire, PUR, halogen-free • **Application:** Zones with oils and lubricants	DOL-2312-G03MMA3	2029213
	• **Description:** Incremental, shielded • **Connection type head A:** Female connector, M23, 12-pin, straight • **Connection type head B:** Flying leads • **Signal type:** Incremental • **Cable:** 5 m, 12-wire, PUR, halogen-free • **Application:** Zones with oils and lubricants	DOL-2312-G05MMA3	2029214
	• **Description:** Incremental, shielded • **Connection type head A:** Female connector, M23, 12-pin, straight • **Connection type head B:** Flying leads • **Signal type:** Incremental • **Cable:** 7 m, 11-wire, PUR • **Application:** Zones with oils and lubricants	DOL-2312-G07MLA3	2030685
	• **Description:** Incremental, shielded • **Connection type head A:** Female connector, M23, 12-pin, straight • **Connection type head B:** Flying leads • **Signal type:** Incremental • **Cable:** 1.5 m, 12-wire, PUR, halogen-free • **Application:** Zones with oils and lubricants	DOL-2312-G1M5MA3	2029212
	• **Description:** Incremental, shielded • **Connection type head A:** Female connector, M23, 12-pin, straight • **Connection type head B:** Flying leads • **Signal type:** Incremental • **Cable:** 10 m, 11-wire, PUR • **Application:** Zones with oils and lubricants	DOL-2312-G10MLA3	2030688
	• **Description:** Incremental, shielded • **Connection type head A:** Female connector, M23, 12-pin, straight • **Connection type head B:** Flying leads • **Signal type:** Incremental • **Cable:** 10 m, 12-wire, PUR, halogen-free • **Application:** Zones with oils and lubricants	DOL-2312-G10MMA3	2029215
	• **Description:** Incremental, shielded • **Connection type head A:** Female connector, M23, 12-pin, straight • **Connection type head B:** Flying leads • **Signal type:** Incremental • **Cable:** 15 m, 11-wire, PUR • **Application:** Zones with oils and lubricants	DOL-2312-G15MLA3	2030692
	• **Description:** Incremental, shielded • **Connection type head A:** Female connector, M23, 12-pin, straight • **Connection type head B:** Flying leads • **Signal type:** Incremental • **Cable:** 20 m, 11-wire, PUR • **Application:** Zones with oils and lubricants	DOL-2312-G20MLA3	2030695
	• **Description:** Incremental, shielded • **Connection type head A:** Female connector, M23, 12-pin, straight • **Connection type head B:** Flying leads • **Signal type:** Incremental • **Cable:** 20 m, 12-wire, PUR, halogen-free • **Application:** Zones with oils and lubricants	DOL-2312-G20MMA3	2029216
	• **Description:** Incremental, shielded • **Connection type head A:** Female connector, M23, 12-pin, straight • **Connection type head B:** Flying leads • **Signal type:** Incremental • **Cable:** 25 m, 11-wire, PUR • **Application:** Zones with oils and lubricants	DOL-2312-G25MLA3	2030699
	• **Description:** Incremental, shielded • **Connection type head A:** Female connector, M23, 12-pin, straight • **Connection type head B:** Flying leads • **Signal type:** Incremental • **Cable:** 30 m, 11-wire, PUR	DOL-2312-G30MLA3	2030702

	Brief description	Type	part no.
	• **Application:** Zones with oils and lubricants		
	• **Description:** Incremental, shielded • **Connection type head A:** Female connector, M23, 12-pin, straight • **Connection type head B:** Flying leads • **Signal type:** Incremental • **Cable:** 30 m, 12-wire, PUR, halogen-free • **Application:** Zones with oils and lubricants	DOL-2312-G30MMA3	2029217
	• **Connection type head A:** Female connector, M12, 8-pin, straight • **Connection type head B:** Male connector, D-Sub, 9-pin, straight • **Signal type:** Incremental • **Cable:** 0.5 m, 8-wire • **Description:** Incremental, shielded • **Note:** Programming adapter cable for programming tool PGT-10-Pro and PGT-08-S	DSL-2D08-G0M5AC3	2046579
	• **Connection type head A:** Female connector, M23, 12-pin, straight • **Connection type head B:** Male connector, D-Sub, 9-pin, straight • **Signal type:** Incremental • **Cable:** 0.5 m, 8-wire • **Description:** Incremental, shielded • **Note:** Programming adapter cable for programming tool PGT-10-Pro and PGT-08-S	DSL-3D08-G0M5AC3	2046580
	• **Connection type head A:** Flying leads • **Connection type head B:** Flying leads • **Signal type:** SSI, Incremental, HIPERFACE® • **Items supplied:** By the meter • **Cable:** 8-wire, PUR, halogen-free • **Description:** SSI, shielded, Incremental, HIPERFACE®	LTG-2308-MWENC	6027529
	• **Connection type head A:** Flying leads • **Connection type head B:** Flying leads • **Signal type:** SSI, Incremental • **Items supplied:** By the meter • **Cable:** 11-wire, PUR • **Description:** SSI, shielded, Incremental	LTG-2411-MW	6027530
	• **Connection type head A:** Flying leads • **Connection type head B:** Flying leads • **Signal type:** SSI, Incremental • **Items supplied:** By the meter • **Cable:** 12-wire, PUR, halogen-free • **Description:** SSI, shielded, Incremental	LTG-2512-MW	6027531
	• **Connection type head A:** Flying leads • **Connection type head B:** Flying leads • **Signal type:** SSI, TTL, HTL, Incremental • **Items supplied:** By the meter • **Cable:** 12-wire, UV and saltwater-resistant, PUR, halogen-free • **Description:** SSI, shielded, TTL, HTL, Incremental	LTG-2612-MW	6028516
	• **Description:** Incremental, shielded, SSI • **Connection type head A:** Female connector, M12, 8-pin, straight • **Connection type head B:** Flying leads • **Signal type:** Incremental, SSI • **Cable:** 2 m, 8-wire, PUR, halogen-free • **Connection systems:** Flying leads • **Application:** Drag chain operation, Zones with oils and lubricants	DOL-1208-G02MAC1	6032866
measuring wheels and measuring wheel mechanics			
	• **Product segment:** Measuring wheels and measuring wheel mechanics • **Product:** Measuring wheels • **Description:** Aluminium measuring wheel with O-ring (NBR70) for 10 mm solid shaft, circumference 300 mm	BEF-MR010030R	2049278
SICK	• **Product segment:** Measuring wheels and measuring wheel mechanics • **Product:** Measuring wheel mechanics • **Description:** O-ring for measuring wheels (circumference 300 mm) • **Items supplied:** 2x O-ring	BEF-OR-083-050	2064076

	Brief description	Type	part no.
Mounting systems			
	• **Description:** Spring arm / mounting arm for DFV60	DFV60 spring arm	2056155

SICK AT A GLANCE

SICK is one of the leading manufacturers of intelligent sensors and sensor solutions for industrial applications. A unique range of products and services creates the perfect basis for controlling processes securely and efficiently, protecting individuals from accidents and preventing damage to the environment.

We have extensive experience in a wide range of industries and understand their processes and requirements. With intelligent sensors, we can deliver exactly what our customers need. In application centers in Europe, Asia and North America, system solutions are tested and optimized in accordance with customer specifications. All this makes us a reliable supplier and development partner.

Comprehensive services complete our offering: SICK LifeTime Services provide support throughout the machine life cycle and ensure safety and productivity.

For us, that is "Sensor Intelligence."

WORLDWIDE PRESENCE:

Contacts and other locations –www.sick.com

SICK
Sensor Intelligence.