Data sheet

WSE26G-24162400A00

W26

PHOTOELECTRIC SENSORS

SICK
Sensor Intelligence.

Illustration may differ

Ordering information

Type	part no.
WSE26G-24162400A00	1127145

Other models and accessories ➜ www.sick.com/W26

Detailed technical data

Features

Functional principle	Through-beam photoelectric sensor
Sensing range	
Sensing range min.	5 m
Sensing range max.	120 m
Maximum distance range from receiver to sender (operating reserve 1)	5 m ... 120 m
Recommended distance range from receiver to sender (operating reserve 2)	5 m ... 85 m
Recommended sensing range for the best performance	5 m ... 85 m
Emitted beam	
Light source	LED
Type of light	Visible red light
Shape of light spot	Point-shaped
Light spot size (distance)	850 mm x 850 mm (40 m)
Maximum dispersion of the emitted beam around the standardized transmission axis (squint angle)	< +/- 1.0° (at Ta = +23 °C)
Key LED figures	
Normative reference	EN 62471:2008-09 | IEC 62471:2006, modified
LED risk group marking	Free group
Wave length	625 nm
Average service life	100,000 h at T_a = +25 °C

Adjustment	
IO-Link	For configuring the sensor parameters and Smart Task functions
Wire/pin	For activating the test input
Display	
LED blue	BluePilot: Alignment aid
LED green	Operating indicator Static on: power on Flashing: IO-Link mode
LED yellow	Status of received light beam Static on: object not present Static off: object present Flashing: Below the 1.5 function reserve

Safety-related parameters

$MTTF_D$	524 years
DC_{avg}	0 %
T_M (mission time)	20 years

Communication interface

IO-Link	✓ , V1.1
Data transmission rate	COM2 (38,4 kBaud)
Cycle time	2.3 ms
Process data length	16 Bit
Process data structure	Bit 0 = switching signal Q_{L1}
	Bit 1 = switching signal Q_{L2}
	Bit 2 ... 15 = empty
VendorID	26
DeviceID HEX	0x800302
DeviceID DEC	8389378
Compatible master port type	A
SIO mode support	Yes

Electronics

Supply voltage U_B	10 V DC ... 30 V DC [1]
Ripple	≤ 5 V_{pp}
Usage category	DC-12 (According to EN 60947-5-2) DC-13 (According to EN 60947-5-2)
Current consumption, sender	≤ 40 mA, without load. At U_B = 24 V < 50 mA
Current consumption, receiver	≤ 30 mA, without load. At U_B = 24 V < 50 mA
Protection class	III
Digital output	
Number	2 (Complementary)

[1] Limit values.
[2] Signal transit time with resistive load in switching mode.
[3] With light/dark ratio 1:1.
[4] This switching output must not be connected to another output.

Type	Push-pull: PNP/NPN
Switching mode	Light/dark switching
Signal voltage PNP HIGH/LOW	Approx. U_B-2.5 V / 0 V
Signal voltage NPN HIGH/LOW	Approx. U_B / < 2.5 V
Output current $I_{max.}$	≤ 100 mA
Circuit protection outputs	Reverse polarity protected
	Overcurrent and short-circuit protected
Response time	≤ 500 µs [2]
Repeatability (response time)	150 µs
Switching frequency	1,000 Hz [3]
Pin/Wire assignment, sender	
Function of pin 4/black (BK)	Test at 0 V
Pin/Wire assignment, receiver	
Function of pin 4/black (BK)	Digital output, light switching, object present → output Q_{L1} LOW; IO-Link communication C [4]
Function of pin 4/black (BK) – detail	The pin 4 function of the sensor can be configured, Additional possible settings via IO-Link
Function of pin 2/white (WH)	Digital output, dark switching, object present → output $\bar{Q}_{L1}$ HIGH
Function of pin 2/white (WH) – detail	The pin 2 function of the sensor can be configured, Additional possible settings via IO-Link

[1] Limit values.
[2] Signal transit time with resistive load in switching mode.
[3] With light/dark ratio 1:1.
[4] This switching output must not be connected to another output.

Mechanics

Housing	Rectangular
Dimensions (W x H x D)	24.6 mm x 82.5 mm x 53.3 mm
Connection	Male connector M12, 4-pin
Material	
Housing	Plastic, VISTAL®
Front screen	Plastic, PMMA
Male connector	Plastic, VISTAL®
Weight	Approx. 160 g
Maximum tightening torque of the fixing screws	1.3 Nm

Ambient data

Enclosure rating	IP66 (EN 60529) IP67 (EN 60529) IP69 (EN 60529) [1]
Ambient operating temperature	–40 °C ... +60 °C
Ambient temperature, storage	–40 °C ... +75 °C
Shock resistance	50 g, 11 ms (25 positive and 25 negative shocks per axis, for X, Y, Z axes, 150 shocks in total (EN60068-2-27)) 50 g, 6 ms (5,000 positive and 5,000 negative shocks per axis, for X, Y, Z axes, 30,000 shocks in total (EN60068-2-27))

[1] Replaces IP69K with ISO 20653: 2013-03.

Vibration resistance	10 Hz ... 2,000 Hz (Amplitude 0.5 mm / 10 g, 20 sweeps per axis, for X, Y, Z axes, 1 octave/min, (EN60068-2-6))
Air humidity	35 % ... 95 %, relative humidity (no condensation)
Electromagnetic compatibility (EMC)	EN 60947-5-2
Resistance to cleaning agent	ECOLAB
UL File No.	NRKH.E181493 & NRKH7.E181493

[1] Replaces IP69K with ISO 20653: 2013-03.

Smart Task

Smart Task name	Base logics
Logic function	Direct AND OR Window Hysteresis
Timer function	Deactivated Switch-on delay Off delay ON and OFF delay Impulse (one shot)
Inverter	Yes
Switching frequency	SIO Logic: 800 Hz [1] IOL: 650 Hz [2]
Response time	SIO Logic: 600 µs [1] IOL: 750 µs [2]
Repeatability	SIO Logic: 300 µs [1] IOL: 400 µs [2]
Switching signal	
Switching signal Q_{L1}	Switching output

[1] Use of Smart Task functions without IO-Link communication (SIO mode).
[2] Use of Smart Task functions with IO-Link communication function.

Diagnosis

Device status	Yes
Quality of teach	Yes
Quality of run	Yes, Contamination display

Certificates

EU declaration of conformity	✓
UK declaration of conformity	✓
ACMA declaration of conformity	✓
Moroccan declaration of conformity	✓
China RoHS	✓
ECOLAB certificate	✓
cULus certificate	✓
IO-Link certificate	✓
Photobiological safety (DIN EN 62471) certificate	✓

Information according to Art. 3 of Data Act (Regulation EU 2023/2854)	✓

Classifications

ECLASS 5.0	27270901
ECLASS 5.1.4	27270901
ECLASS 6.0	27270901
ECLASS 6.2	27270901
ECLASS 7.0	27270901
ECLASS 8.0	27270901
ECLASS 8.1	27270901
ECLASS 9.0	27270901
ECLASS 10.0	27270901
ECLASS 11.0	27270901
ECLASS 12.0	27270901
ETIM 5.0	EC002716
ETIM 6.0	EC002716
ETIM 7.0	EC002716
ETIM 8.0	EC002716
UNSPSC 16.0901	39121528

Dimensional drawing, sensor

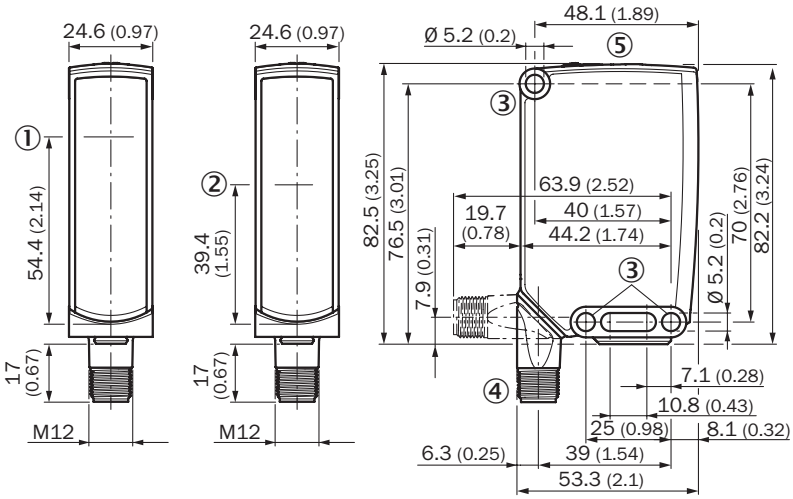

Dimensions in mm (inch)
① Center of optical axis, sender
② Center of optical axis, receiver
③ Mounting hole, Ø 5.2 mm
④ Connection
⑤ display and adjustment elements

display and adjustment elements

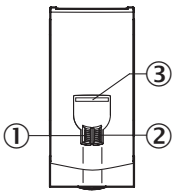

① LED indicator green
② LED indicator yellow
③ LED blue

pinouts

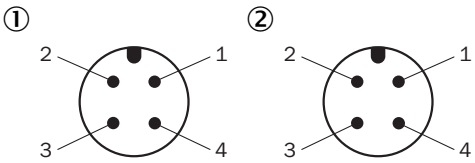

M12 male connector, 4-pin, A-coding
① receiver
② sender

Connection diagram Cd-392

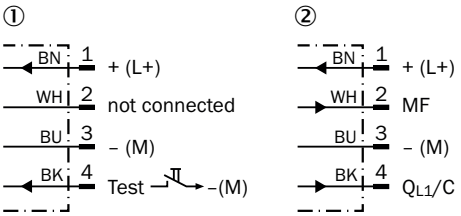

① sender
② receiver

Truth table Push-pull: PNP/NPN - light switching Q

	Light switching Q (normally closed (upper switch), normally open (lower switch))	
	Object not present ➜ Output HIGH	Object present ➜ Output LOW
Light receive	✓	✗
Light receive indicator	●	✗
Load resistance to L+	✗	⚠
Load resistance to M	⚠	✗
	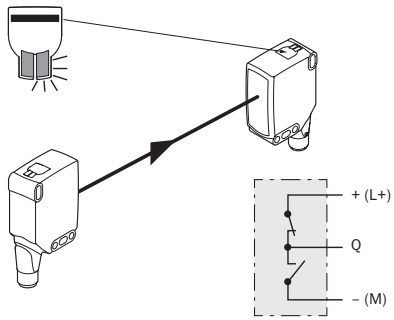	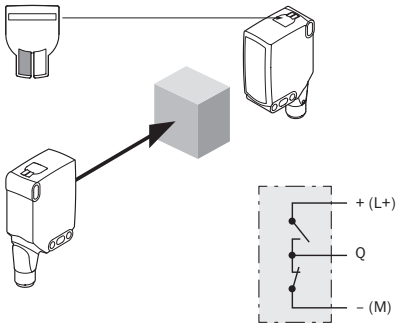

Truth table Push-pull: PNP/NPN – dark switching Q̄

	Dark switching Q̄ (normally open (upper switch), normally closed (lower switch))	
	Object not present ➜ Output LOW	Object present ➜ Output HIGH
Light receive	✓	✗
Light receive indicator	●	✗
Load resistance to L+	⚠	✗
Load resistance to M	✗	⚠
	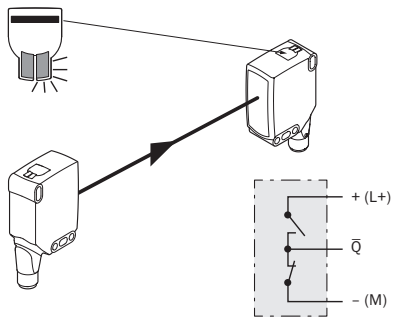	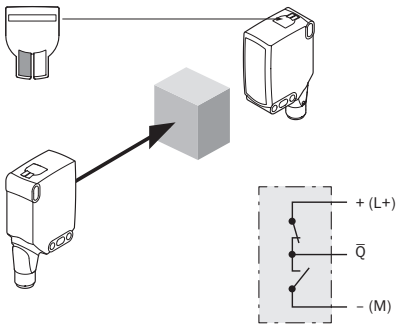

Characteristic curve

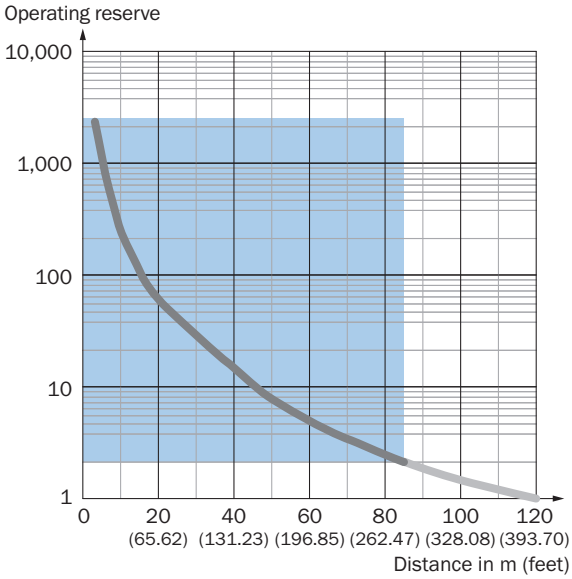

Recommended sensing range for the best performance

Light spot size

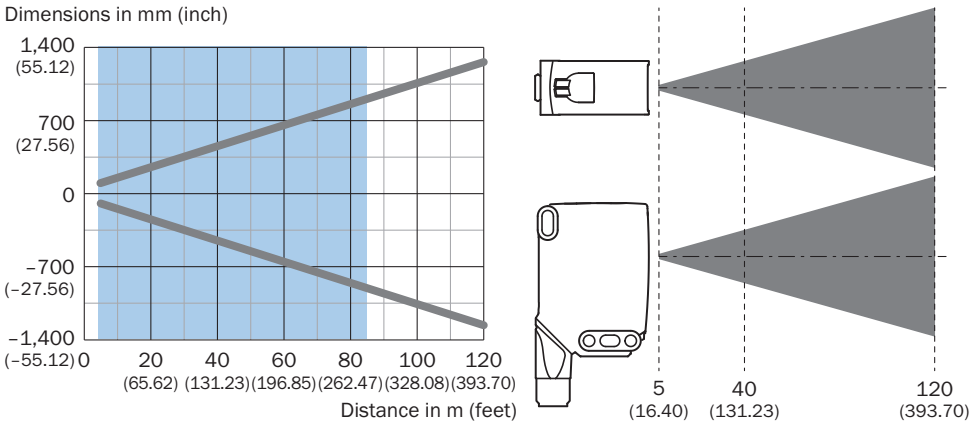

Recommended sensing range for the best performance

Sensing range diagram

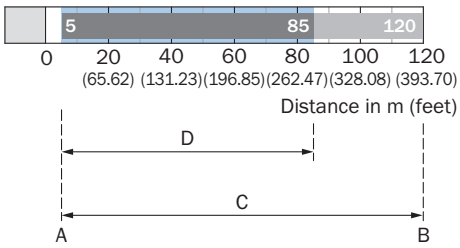

Recommended sensing range for the best performance

A	Sensing range min. in mm
B	Sensing range max. in mm
C	Maximum distance range from receiver to sender
D	Recommended distance range from receiver to sender

Functions Operation note

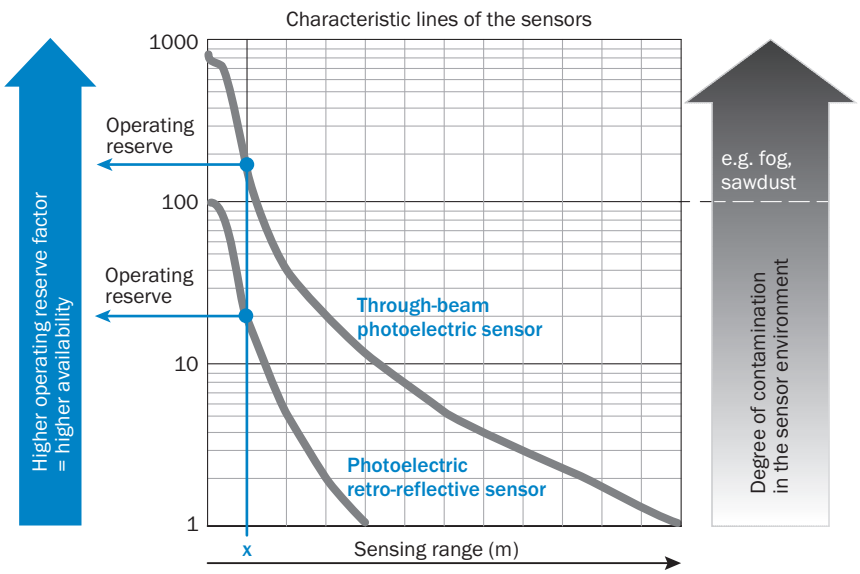

At a sensing range of „x“ the photoelectric retro-reflective and through-beam photoelectric sensors have different operating reserves (see blue arrow). The higher the operating reserve factor, the better the sensor can compensate the contamination in the air or in the light beam and on the optical surfaces (front screen, reflector), i.e. the sensor has the maximum availablity, otherwise the sensor switches due to pollution although there is no object in the path of the light beam.

Functions Operation note

BluePilot: Blue indicator LEDs with double benefits

Easy and quick sensor alignment with the help of the LED indicator All blue LEDs illuminate – optimum alignment – highest possible operating reserve	**WSE through-beam photoelectric sensor alignment** 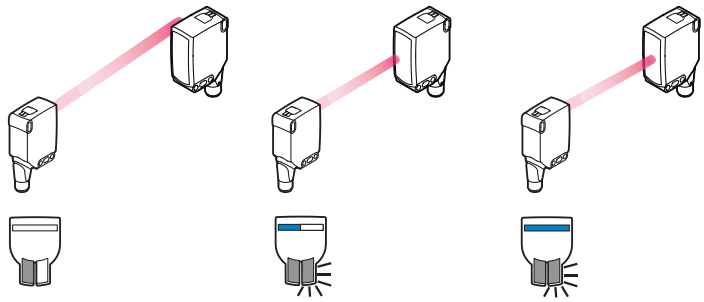
Service note A reduction in sensor availability is displayed by a decrease of the blue LEDs. Possible causes: a) insufficient alignment b) contamination of the optical surfaces c) particles in the light beam	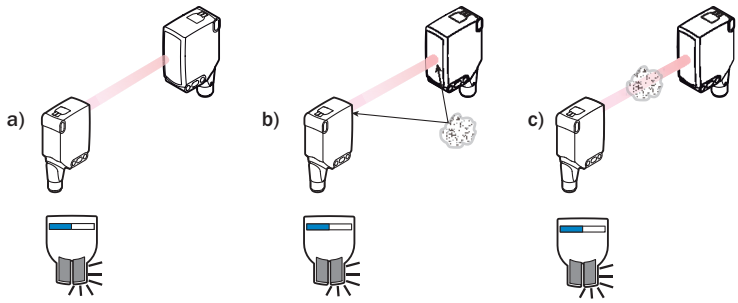

Recommended accessories

Other models and accessories ➜ www.sick.com/W26

	Brief description	Type	part no.
Mounting systems			
	• **Description:** Mounting bracket with hinged arm • **Material:** Steel • **Details:** Steel, zinc coated • **Items supplied:** Mounting hardware included • **Suitable for:** W23-2, W27-3, Reflex Array	BEF-WN-W27	2009122
	• **Description:** Plate N12 for universal clamp. For mounting PL30A, P250 reflectors, W27 and WTR2 sensors. • **Material:** Steel, zinc diecast • **Details:** Zinc plated steel (sheet), Zinc die cast (clamping bracket) • **Items supplied:** Universal clamp (2022726), mounting hardware • **Usable for:** W26, Reflex Array, P250, W23-2, W27-3, W27-3	BEF-KHS-N12	2071950
	• **Description:** Mounting bracket with articulated arm • **Material:** Steel • **Details:** Steel, zinc coated • **Items supplied:** Mounting hardware included • **Suitable for:** W16, W26, W11, W12, W23, W27, Dx50, W280, G10	BEF-WN-MULTI2	2093945
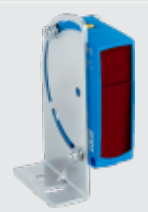	• **Description:** Mounting bracket • **Material:** Steel • **Details:** Steel, zinc coated • **Items supplied:** Mounting hardware included • **Suitable for:** W23-2, W27-3, Reflex Array	BEF-WN-W23	2019085
	• **Description:** Plate N11N for universal clamp bracket • **Material:** Stainless steel • **Details:** Stainless steel 1.4571 (sheet), Stainless steel 1.4408 (clamp) • **Items supplied:** Universal clamp (5322627), mounting hardware • **Usable for:** DeltaPac, Glare, WTD20E	BEF-KHS-N11N	2071081

	Brief description	Type	part no.
connectors and cables			
	• **Connection type head A:** Male connector, M12, 4-pin, straight, A-coded • **Description:** Unshielded • **Connection systems:** Screw-type terminals • **Permitted cross-section:** ≤ 0.75 mm²	STE-1204-G	6009932
	• **Connection type head A:** Female connector, M12, 4-pin, straight, A-coded • **Connection type head B:** Flying leads • **Signal type:** Sensor/actuator cable • **Cable:** 5 m, 4-wire, PVC • **Description:** Sensor/actuator cable, unshielded • **Application:** Zones with chemicals, Uncontaminated zones	YF2A14-050VB3XLEAX	2096235
	• **Connection type head A:** Female connector, M12, 4-pin, straight, A-coded • **Connection type head B:** Flying leads • **Signal type:** Sensor/actuator cable • **Cable:** 5 m, 4-wire, PUR, halogen-free • **Description:** Sensor/actuator cable, unshielded • **Application:** Uncontaminated zones, Zones with oils and lubricants, Robot, Drag chain operation	YF2A14-050UB3XLEAX	2095608

SICK AT A GLANCE

SICK is one of the leading manufacturers of intelligent sensors and sensor solutions for industrial applications. A unique range of products and services creates the perfect basis for controlling processes securely and efficiently, protecting individuals from accidents and preventing damage to the environment.

We have extensive experience in a wide range of industries and understand their processes and requirements. With intelligent sensors, we can deliver exactly what our customers need. In application centers in Europe, Asia and North America, system solutions are tested and optimized in accordance with customer specifications. All this makes us a reliable supplier and development partner.

Comprehensive services complete our offering: SICK LifeTime Services provide support throughout the machine life cycle and ensure safety and productivity.

For us, that is "Sensor Intelligence."

WORLDWIDE PRESENCE:

Contacts and other locations –www.sick.com

SICK
Sensor Intelligence.