Data sheet

SLG50S-140SCR11A00

SLG-2

AUTOMATION LIGHT GRIDS

SICK
Sensor Intelligence.

Illustration may differ

Ordering information

Type	part no.
SLG50S-140SCR11A00	1116854

Other models and accessories ➜ www.sick.com/SLG-2

Detailed technical data

Features

Included with delivery	1 × sender 1 × receiver 1 × Quick Start Guide 1 x safety notes
Functional principle	Sender/receiver
Sensing range	
Limit values	440 mm ... 2,400 mm
Parallel beam (recommended)	440 mm ... 1,700 mm
3 x cross beam (recommended)	440 mm ... 1,700 mm
Blind zone	
Distance from 1st Beam to leading edge of housing (connection side)	4.6 mm
Distance from last beam to leading edge of housing (top)	44.6 mm [1]
Detection height	1,400 mm
Beam separation	50 mm
Optical light exit	Slim
Detection capability	
Minimum detectable object (MDO), parallel beam	55 mm [2]

[1] For a detection height < 700 mm, the measured value can vary by up to 1 mm from the measured values specified here.
[2] MDO: Minimum detectable size of an arbitrarily shaped object.
[3] Depends on the sensing range / number of beams / cross beam.

Minimum detectable object (MDO), 3 x cross beam	≥ 29 mm [2]
Factory setting	
Beam function	Parallel beam
Pin 2 (MF)	Teach-in input
Pin 4 (OUT)	Object detection output = “HIGH”
IO-Link (process data)	Q_L/Q_{int} Status, System status, Beam status
Teach-in (default)	Auto teach-in
Adjustment	
IO-Link	For configuring the sensor parameters and Smart Task functions
Emitted beam	
Light source	LED
Type of light	Infrared light
Number of beams	28
LED key figures	
Normative reference	EN 62471:2008-09 | IEC 62471:2006, modified
LED risk group marking	Free group
Wave length	850 nm
Average service life	Average service life: 100,000 h at T_U = +25 °C
Time specifications	
Initialization time	0.4 s ... 2 s [3]
Teach-in time	0.75 s ... 50 s [3]
Scan time, parallel beam	1.6 ms
Scan time, cross beam	3.3 ms
Repeatability, parallel beam	1.6 ms
Repeatability, cross beam	4.9 ms
Minimum dwell time, parallel beam	3.3 ms
Minimum dwell time, cross beam	6.6 ms
Max. response time, parallel beam	5.1 ms
Max. response time, cross beam	10.2 ms
Type of synchronization	Optical (2 beams)

[1] For a detection height < 700 mm, the measured value can vary by up to 1 mm from the measured values specified here.
[2] MDO: Minimum detectable size of an arbitrarily shaped object.
[3] Depends on the sensing range / number of beams / cross beam.

Communication interface

IO-Link	✓, V1.1
Data transmission rate	COM3 (230,4 kBaud)
Cycle time	2.3 ms
Process data length	32 Byte
Maximum cable length	20 m

Electronics

Supply voltage U_B	DC 18 V DC ... 30 V DC [1]
Ripple	≤ 1.3 V_{pp}
Power consumption	
Sender	≤ 37.1 mA [2]
Receiver	≤ 55.8 mA [2]
Digital output	
Number	2
Type	Push-pull: PNP/NPN
Output signal voltage HIGH/LOW	U_B-3 V/<3 V
Output load, Inductive	1 H
Output load, capacitive	100 nF
Output current $I_{max.}$	100 mA
Output current, rest	< 0.5 mA
Digital input	
Number	1
Input signal voltage HIGH/LOW	>15 V/<5 V
Protection class	III [3]
UL File No.	NRKH.E181493 & NRKH7.E181493
Circuit protection	U_V connections, reverse polarity protected Output Q short-circuit protected Outputs overcurrent and short-circuit protected

[1] Without load.
[2] At 24 V.
[3] EN 61140.

Mechanics

Dimensions (W x H x D)	
Width	11.8 mm
Height	1,399.2 mm
Depth	24.1 mm
Connection type	Cable with M8 male connector, 4-pin
Connection type Detail	
Cable diameter	3.4 mm
Conductor cross section	0.14 mm²
Length of cable	150 mm
Cable material	PVC
Material	
Housing	Aluminum
	Plastic
Front screen	PMMA
Weight	1,960 g
Overvoltage protection (required)	1

Ambient data

Enclosure rating	IP65 [1)] IP67
Ambient temperature, operation	–25 °C ... +55 °C
Ambient temperature, storage	–25 °C ... +70 °C
Ambient light immunity	Direct: 100,000 lx [2)] Indirect: 150,000 lx [2)]
Shock resistance	10 g, 16 ms, DIN EN 60068-2-27
Vibration resistance	10-150 Hz 0.5 mm, IEC 60068-2-6
Air humidity	≤ 96 %, relative humidity (no condensation)
Electromagnetic compatibility (EMC)	EN 61000-6-2, EN 61000-6-4

[1)] Operating in outdoor condition only with a external protection housing.
[2)] Sunlight.

Smart Task

Smart Task name	Base logics
Logic function	Direct AND OR
Timer function	Deactivated Switch-on delay Off delay ON and OFF delay Impulse (one shot)
Switching signal	
Switching signal Q_{L1}	Switching output
Switching signal Q_{L2}	Switching output, external input

Diagnosis

Diagnostics functions	
Device state	Hardware error, temperature warning, operating hours warning
Communication state	Pin short-circuit error, invalid process data
Status of the light signal	Teach error, synchronization error, quality-of-run alarm
Alarm output	Yes

Certificates

EU declaration of conformity	✓
UK declaration of conformity	✓
ACMA declaration of conformity	✓
Moroccan declaration of conformity	✓
China RoHS	✓
cULus certificate	✓
IO-Link certificate	✓
Photobiological safety (IEC EN 62471)	✓
Information according to Art. 3 of Data Act (Regulation EU 2023/2854)	✓

Classifications

ECLASS 5.0	27270910
ECLASS 5.1.4	27270910
ECLASS 6.0	27270910
ECLASS 6.2	27270910
ECLASS 7.0	27270910
ECLASS 8.0	27270910
ECLASS 8.1	27270910
ECLASS 9.0	27270910
ECLASS 10.0	27270910
ECLASS 11.0	27270910
ECLASS 12.0	27270910
ETIM 5.0	EC002549
ETIM 6.0	EC002549
ETIM 7.0	EC002549
ETIM 8.0	EC002549
UNSPSC 16.0901	39121528

Dimensional drawing, sensor

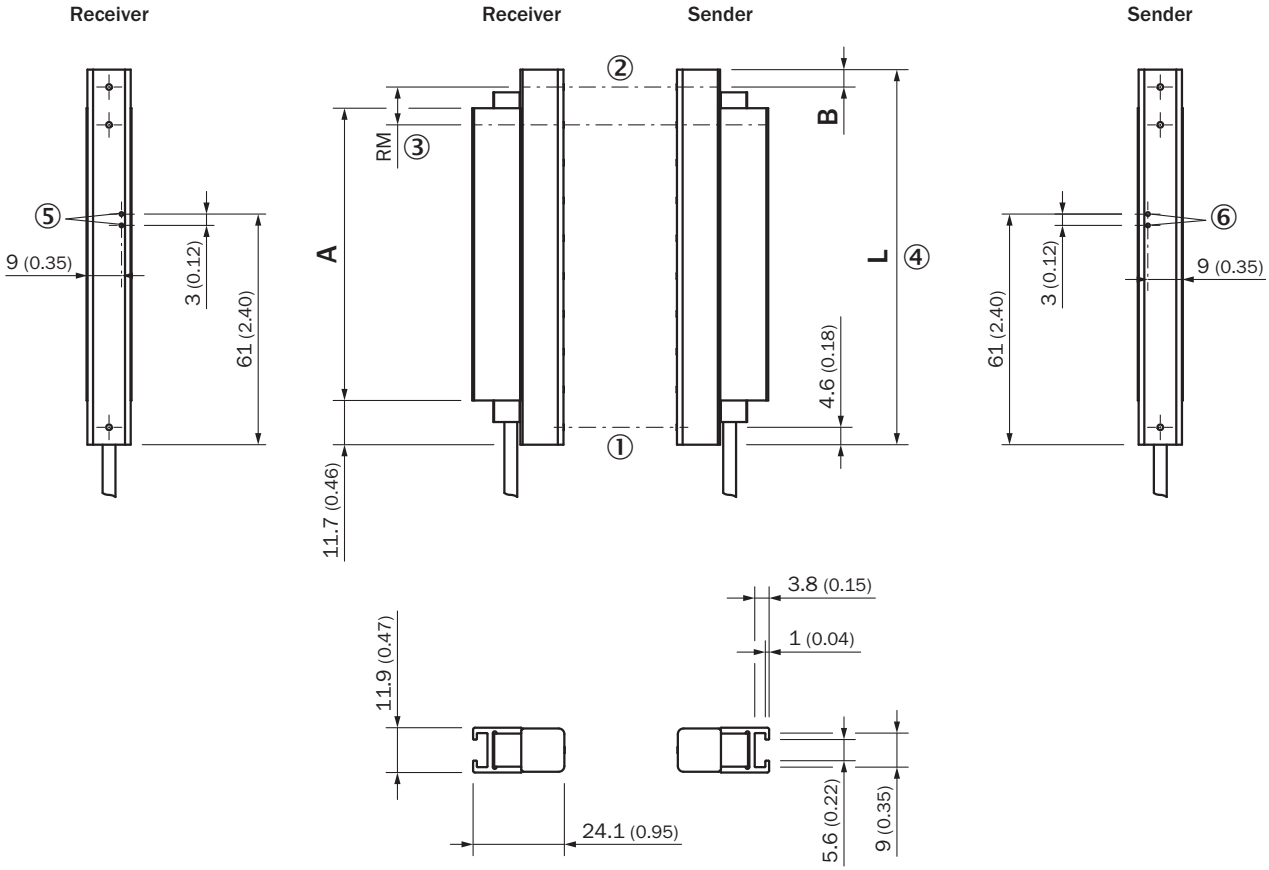

Dimensions in mm (inch)
SLGxxx-xxxSxxxxxxx
① First beam
② last beam
③ beam separation (RM)
④ Housing length
⑤ LED display receiver
⑥ LED display sender

Dimensions in mm (inch)		
–	Length of stabilizer	Housing length
	A	**L**
SLGxxx-**0 10**xxxxxxxx	77 (3.03)	99,2 (3.91)
SLGxxx-**02 0**xxxxxxxx	178 (7.01)	199,2 (7.84)
SLGxxx-**03 0**xxxxxxxx	276 (10.87)	299,2 (11.78)
SLGxxx-**04 0**xxxxxxxx	376 (14.8)	399,2 (15.72)
SLGxxx-**05 0**xxxxxxxx	475 (18.7)	499,2 (19.65)
SLGxxx-**06 0**xxxxxxxx	576 (22.68)	599,2 (23.6)
SLGxxx-**07 0**xxxxxxxx	676 (26.61)	699,2 (27.53)
SLGxxx-**08 0**xxxxxxxx	776 (30.55)	799,2 (31.46)
SLGxxx-**100**xxxxxxxx	975 (38.39)	999,2 (39.34)
SLGxxx-**120**xxxxxxxx	1.175 (46.26)	1.199,2 (47.21)
SLGxxx-**140**xxxxxxxx	1.374 (54.09)	1.399,2 (55.09)
SLGxxx-**160**xxxxxxxx	1.574 (61.97)	1.599,2 (62.96)
SLGxxx-**180**xxxxxxxx	1.774 (69.84)	1.799,2 (70.83)
SLGxxx-**20 0**xxxxxxxx	1.973 (77.68)	1.999,2 (78.71)
SLGxxx-**220**xxxxxxxx	2.173 (85.55)	2.199,2 (86.58)
SLGxxx-**240**xxxxxxxx	2.372 (93.39)	2.399,2 (94.46)
–	–	–
	Distance: Housing edge - last beam	
	B [1]	
SLG**10**x-xxxxxxxxxxx	4,6 (0.18)	
SLG**25**x-xxxxxxxxxxx	19,6 (0.77)	
SLG**50**x-xxxxxxxxxxx	44,6 (1.76)	

[1] for detection height less than 700 mm, the dimension deviates up to 1 mm from the dimensions specified here.

dimensional drawing, connection type

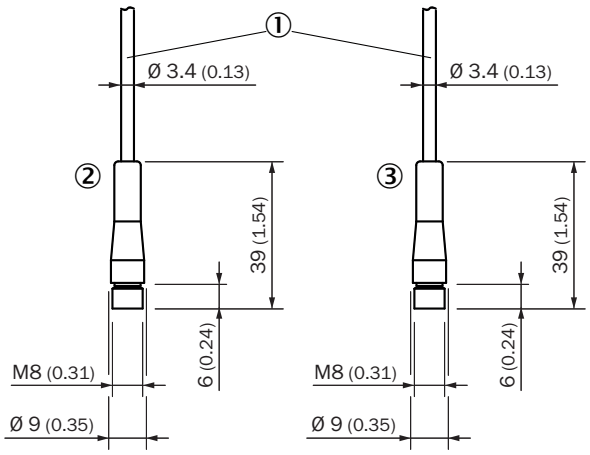

Dimensions in mm (inch)
cable with connector M8
① connection (see technical data for length of cable)
② receiver
③ sender

pinouts

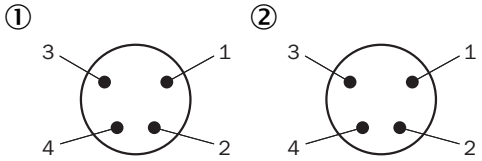

male connector M8, 4-pin
① receiver
② sender

Connection diagram

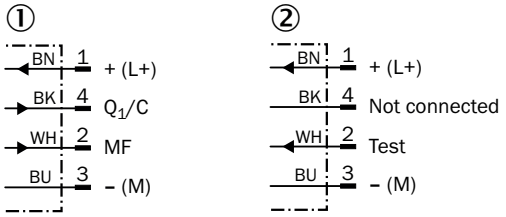

cd-543
① receiver
② sender

Instruction for installation Minimum distance to reflective materials

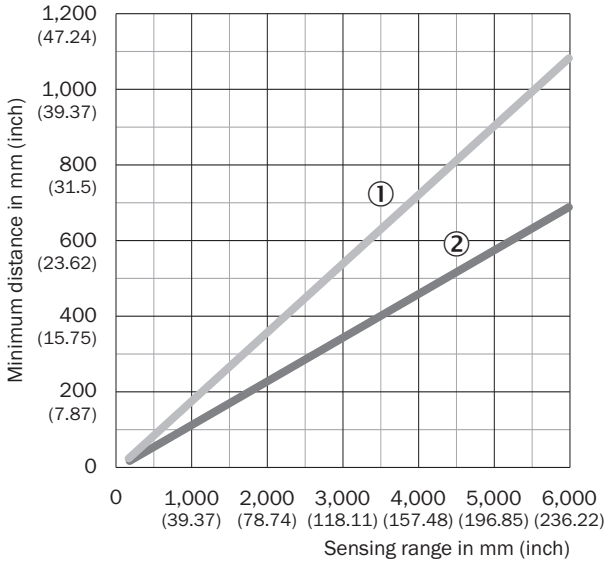

Depending on the sensing range, make sure that there are no reflective objects in the field of view of the light grid pair
① Minimum distance (safe)
② Minimum distance (typical)

Instruction for installation Minimum distance between 2 light grids

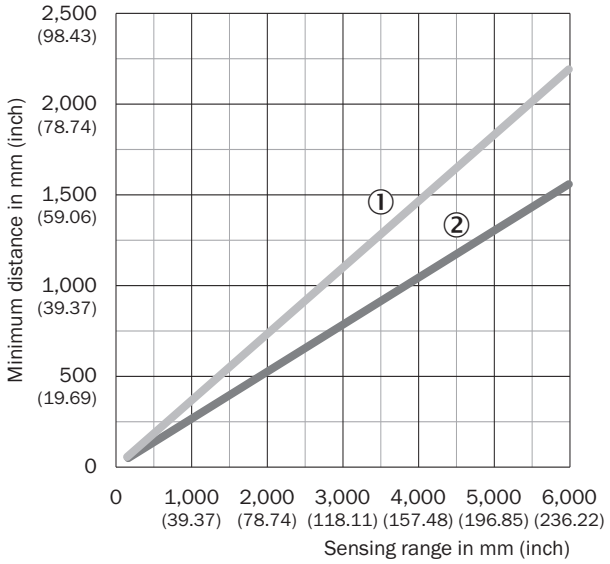

If not installed in opposition, make sure the minimum distance between the two light grid pairs is adhered to
① Minimum distance (safe)
② Minimum distance (typical)

Instruction for installation Slim & Flat

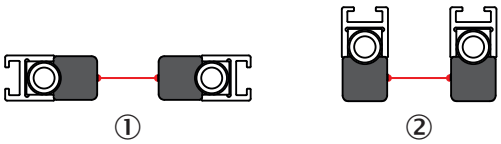

① Slim model = light emission on narrow side
② Flat model = light emission on broad side

Detection capability Minimum detectable object (MDO)

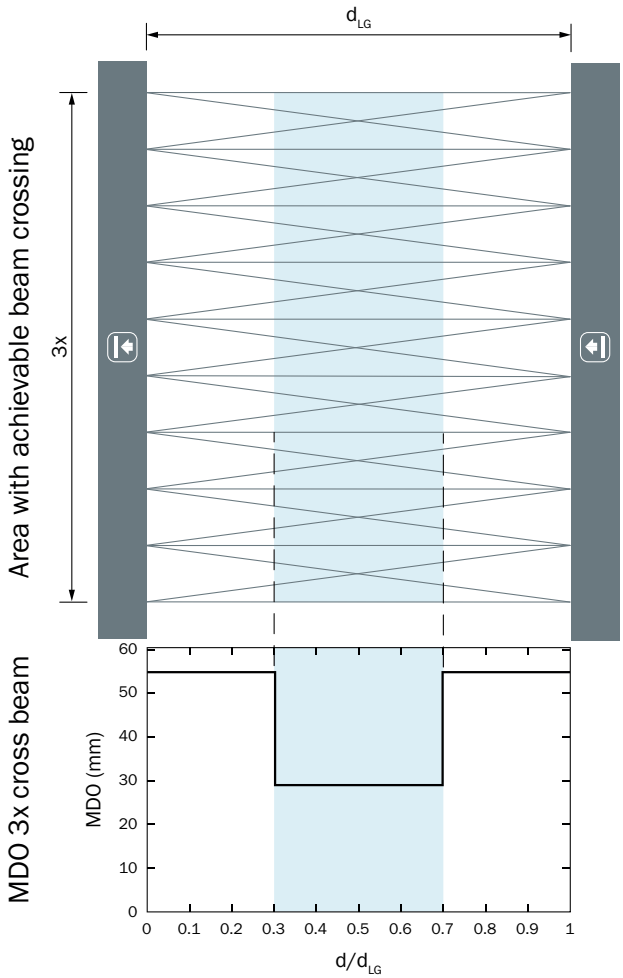

d_{LG} = Installed working distance between sender and receiver

d = Distance to sender or receiver related to the installed working distance

Functional principle Optical synchronization

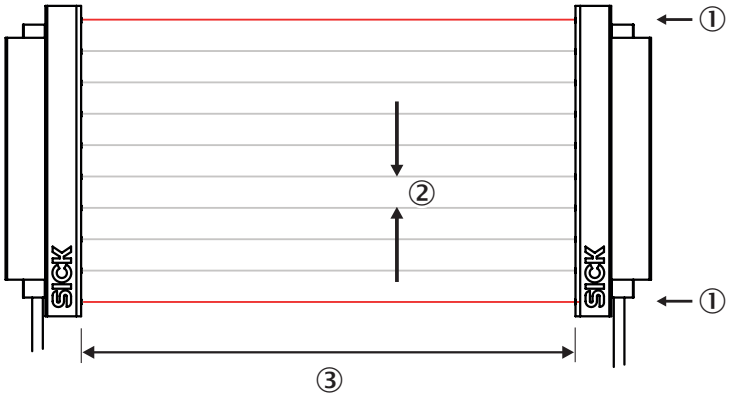

The sender and receiver synchronize with each other optically, so no electrical connection is necessary.
For this reason, either the first or the last beam of the automation light grid must remain clear.
If both beams are interrupted, no measurements can be taken.
① Optical synchronization
② Beam separation
③ scanning range

Recommended accessories

Other models and accessories ➜ www.sick.com/SLG-2

	Brief description	Type	part no.
Mounting systems			
	• **Description:** Mounting bracket for switching automation light grids, SLG-2 • **Packing unit:** 4 pieces	BEF-SLG2-SET1	2111623

	Brief description	Type	part no.
network devices			
		SIG350-0004AP100	6076871
		SIG350-0005AP100	6076923
		SIG350-0006AP100	6076924
connectors and cables			
	• **Connection type head A:** Female connector, M8, 4-pin, straight, A-coded • **Connection type head B:** Male connector, M12, 4-pin, straight, A-coded • **Signal type:** Sensor/actuator cable • **Cable:** 0.6 m, 4-wire, PUR, halogen-free • **Description:** Sensor/actuator cable, unshielded • **Application:** Uncontaminated zones, Zones with oils and lubricants, Robot, Drag chain operation	YF8U14-C60UA3M2A14	2096135
	• **Connection type head A:** Female connector, M8, 4-pin, straight, A-coded • **Connection type head B:** Male connector, M12, 4-pin, straight, A-coded • **Signal type:** Sensor/actuator cable • **Cable:** 5 m, 4-wire, PUR, halogen-free • **Description:** Sensor/actuator cable, unshielded • **Application:** Uncontaminated zones, Zones with oils and lubricants, Robot, Drag chain operation	YF8U14-050UA3M2A14	2096137
	• **Connection type head A:** Female connector, M8, 4-pin, straight, A-coded • **Connection type head B:** Flying leads • **Signal type:** Sensor/actuator cable • **Cable:** 5 m, 4-wire, PUR, halogen-free • **Description:** Sensor/actuator cable, unshielded • **Application:** Uncontaminated zones, Zones with oils and lubricants, Robot, Drag chain operation	YF8U14-050UA3XLEAX	2094792
	• **Connection type head A:** Male connector, M12, 5-pin, A-coded • **Connection type head B:** Female connector, M12, 5-pin, A-coded • **Connection type head C:** Female connector, M12, 3-pin, A-coded • **Description:** Unshielded	YM2A15-000S01FY2A5	2099606
	• **Connection type head A:** Female connector, M8, 4-pin, straight, A-coded • **Connection type head B:** Male connector, M12, 4-pin, straight, A-coded • **Signal type:** Sensor/actuator cable • **Cable:** 1 m, 4-wire, PUR, halogen-free • **Description:** Sensor/actuator cable, unshielded • **Application:** Uncontaminated zones, Zones with oils and lubricants, Robot, Drag chain operation	YF8U14-010UA3M2A14	2145835

	Brief description	Type	part no.
integration modules and adapters			
	• **Description:** External, passive control unit with one pushbutton and three LEDs; cable with male connector M8, 4-pin; cable material: PUR; housing material: plastic, TPU, reinforced; supply voltage: DC 10 V DC ... 30 V DC; current Imax.: 510 mA; protection class: III (EN 61140); EMC: EN 61000-6-2, EN 61000-6-4; ambient temperature operation: –25 °C ... +55 °C; ambient temperature storage: –25 °C ... +70 °C	ECU1-1111AAAZZZ	2118077

SICK AT A GLANCE

SICK is one of the leading manufacturers of intelligent sensors and sensor solutions for industrial applications. A unique range of products and services creates the perfect basis for controlling processes securely and efficiently, protecting individuals from accidents and preventing damage to the environment.

We have extensive experience in a wide range of industries and understand their processes and requirements. With intelligent sensors, we can deliver exactly what our customers need. In application centers in Europe, Asia and North America, system solutions are tested and optimized in accordance with customer specifications. All this makes us a reliable supplier and development partner.

Comprehensive services complete our offering: SICK LifeTime Services provide support throughout the machine life cycle and ensure safety and productivity.

For us, that is "Sensor Intelligence."

WORLDWIDE PRESENCE:

Contacts and other locations –www.sick.com

SICK
Sensor Intelligence.