Data sheet

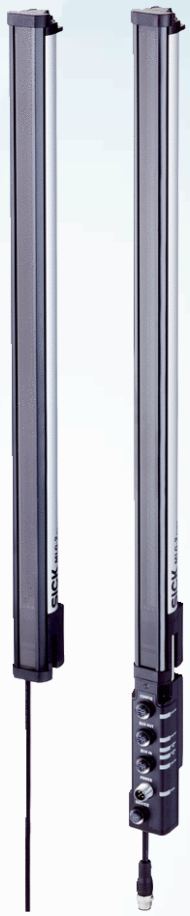

MLG05W-0800N12501

MLG-2 WebChecker

AUTOMATION LIGHT GRIDS

SICK
Sensor Intelligence.

Illustration may differ

Ordering information

Type	part no.
MLG05W-0800N12501	1115928

Other models and accessories ➜ www.sick.com/MLG-2_WebChecker

Detailed technical data

Features

Device version	Web guiding
Sensor principle	Sender/receiver
Minimum object length	4 mm [1]
Beam separation	5 mm
Resolution	0.1 mm
Cycle time	32 µs per beam
Repeatability	6 µm [2]
Accuracy	± 0.3 mm [3]
Type of synchronization	Cable
Number of beams	240
Total measuring field width	1,195 mm
Measuring field width detailed	
Measuring field width (connection side)	1,195 mm
Blind zone (medium range)	0 mm
Measuring field width (head side)	0 mm
Software features (default)	
Q_1	Alarm, general
Application	Standard mode
Included with delivery	1 × sender 1 × receiver 1 x Fieldbus module 4/6 x QuickFix brackets (6 x QuickFix brackets for monitoring heights above 2 m)

[1] See graphic: product definition.
[2] 1 sigma, 0% object transmission (sensor internal value).
[3] Typical 0.1 mm. For opaque objects and exact alignment of sender/receiver.

	1 × Quick Start Guide

[1] See graphic: product definition.
[2] 1 sigma, 0% object transmission (sensor internal value).
[3] Typical 0.1 mm. For opaque objects and exact alignment of sender/receiver.

Mechanics/electronics

Light source	LED, Infrared light
Wave length	850 nm
Supply voltage V_s	DC 19.2 V ... 28.8 V [1]
Power consumption sender	67 mA [2]
Power consumption receiver	168 mA [2]
Fieldbus module current consumption	115 mA
Ripple	< 5 V_{pp}
Output current $I_{max.}$	100 mA
Output load, capacitive	100 nF
Output load, Inductive	1 H
Initialization time	< 1 s
Switching output	Push-pull: PNP/NPN
Dimensions (W x H x D)	34 mm x 1,279.4 mm x 30.6 mm
Connection type	Plug, M12, 5-pin, 0.22 m Connector M12, 12-pin, 0.27 m
Housing material	Aluminum
Display	LED
Enclosure rating	IP65, IP67 [3]
Circuit protection	U_V connections, reverse polarity protected Output Q short-circuit protected Interference pulse suppression
Protection class	III
Weight	2.659 kg
Front screen	PMMA
Option	None
UL File No.	NRKH.E181493

[1] Without load.
[2] Without load with 24 V.
[3] Operating in outdoor condition only with a external protection housing.

Performance

Maximum range	3.5 m [1]
Minimum range	≥ 0.2 m
Operating range	2.5 m
Response time	48.5 ms [2]

[1] No reserve for environmental issue and deterioration of the diode.
[2] With resistive load.

Interfaces

PROFINET	✓
Digital output	Q_1
Number	1

Ambient data

Shock resistance	Continuous shocks 10 g, 16 ms, 1000 shocks Single shocks 15 g, 11 ms 3 per axle
Vibration resistance	Sinusoidal oscillation 10-150 Hz 5 g
Ambient light immunity	100,000 lx
Ambient operating temperature	–30 °C ... +55 °C
Ambient temperature, storage	–40 °C ... +70 °C

Certificates

EU declaration of conformity	✓
UK declaration of conformity	✓
ACMA declaration of conformity	✓
Moroccan declaration of conformity	✓
China RoHS	✓
cULus certificate	✓
Photobiological safety (IEC EN 62471)	✓
Information according to Art. 3 of Data Act (Regulation EU 2023/2854)	✓

Classifications

ECLASS 5.0	27270910
ECLASS 5.1.4	27270910
ECLASS 6.0	27270910
ECLASS 6.2	27270910
ECLASS 7.0	27270910
ECLASS 8.0	27270910
ECLASS 8.1	27270910
ECLASS 9.0	27270910
ECLASS 10.0	27270910
ECLASS 11.0	27270910
ECLASS 12.0	27270910
ETIM 5.0	EC002549
ETIM 6.0	EC002549
ETIM 7.0	EC002549
ETIM 8.0	EC002549
UNSPSC 16.0901	39121528

Dimensional drawing

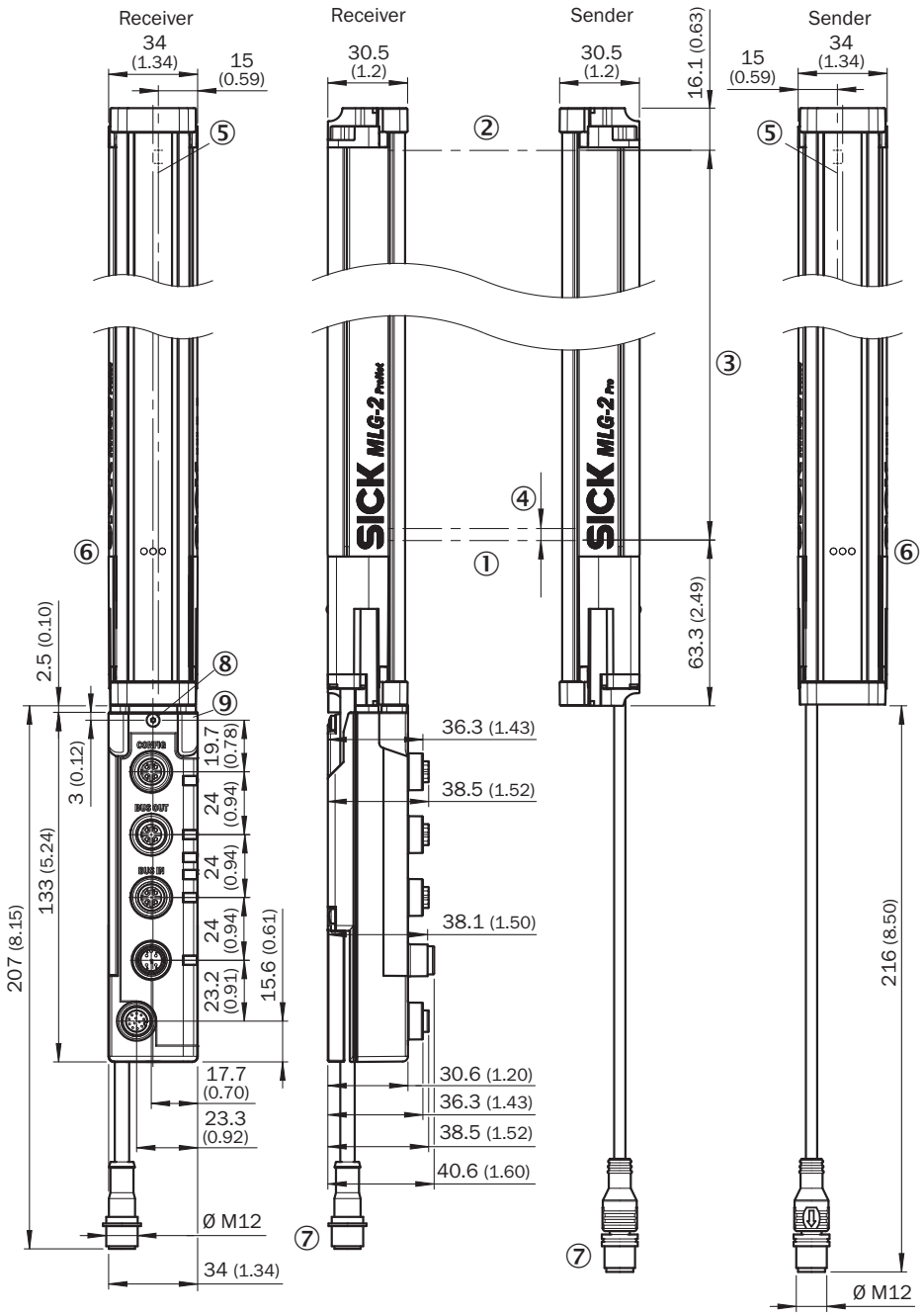

Dimensions in mm (inch)
① First beam
② last beam
③ total measuring field width (see technical data)
④ Beam separation
⑤ Optical axis
⑥ status indicator: green, yellow, red LEDs
⑦ Connection

Dimensional drawing PROFINET, EtherCAT®, EtherNet/IP

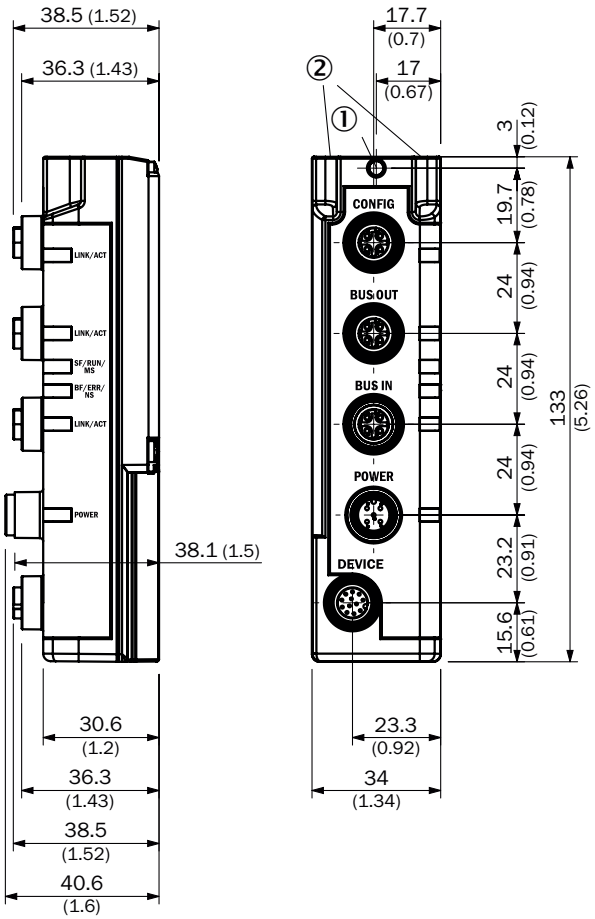

Dimensions in mm (inch)
① safty screw M4; turning moment 0,5 Nm
② for thread bold M4; turning moment 0,5 Nm

Connection type and diagram MLG-2 WebChecker

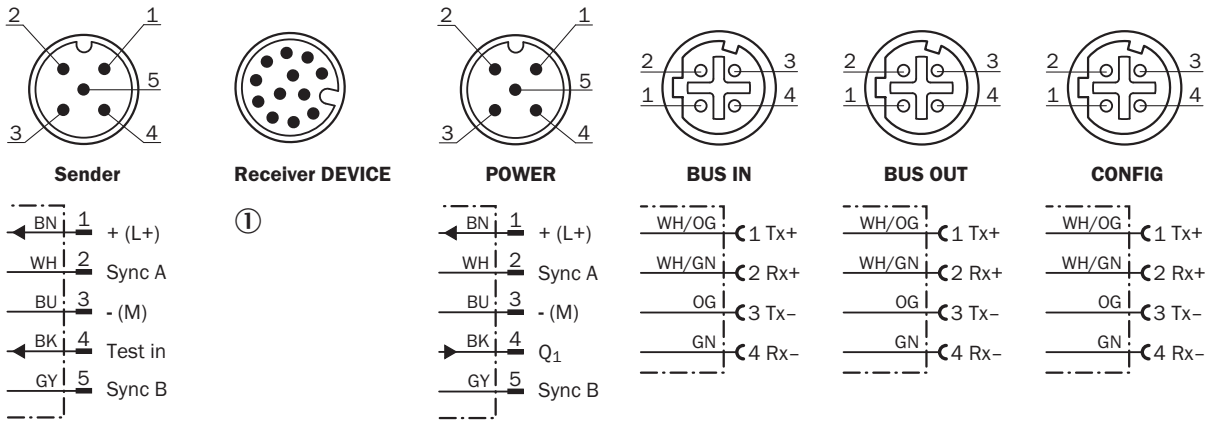

① *Connection to fieldbus module*

Pinouts Ethernet

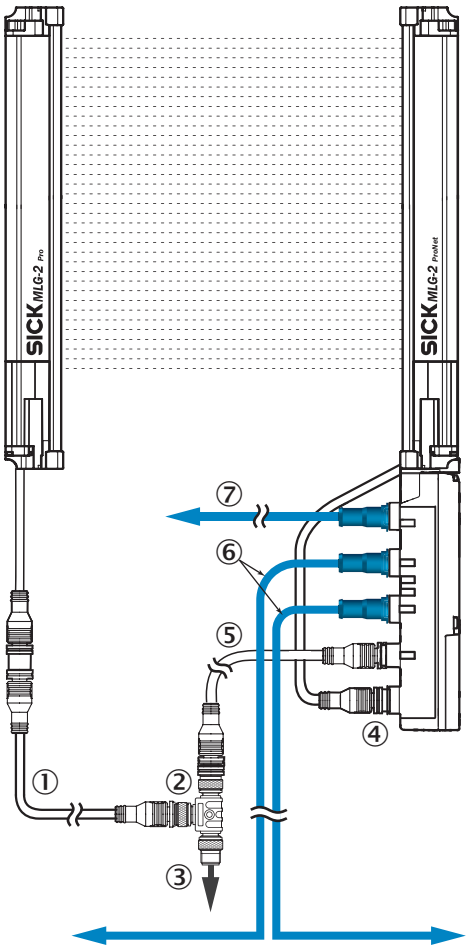

① Connection cable receiver (2096010)
② T-piece
③ Connection cable (2096240)
④ connection receiver “DEVICE”
⑤ Connection cable “POWER” (2096010)
⑥ Ethernet Connection cable “BUS IN, BUS OUT”
⑦ Ethernet connection cable “CONFIG”

Adjustments

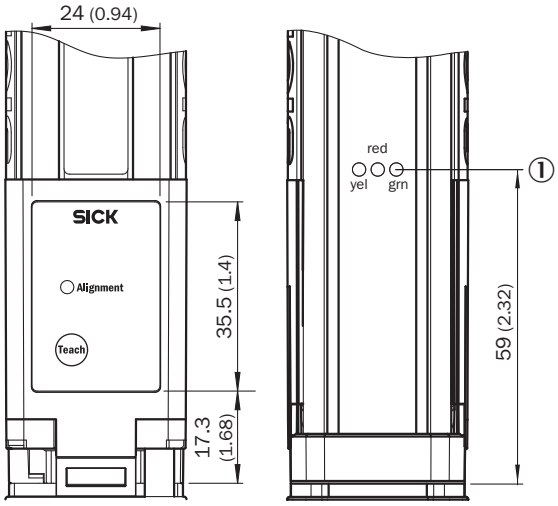

① status indicator: green, yellow, red LEDs

Connection diagram T-piece

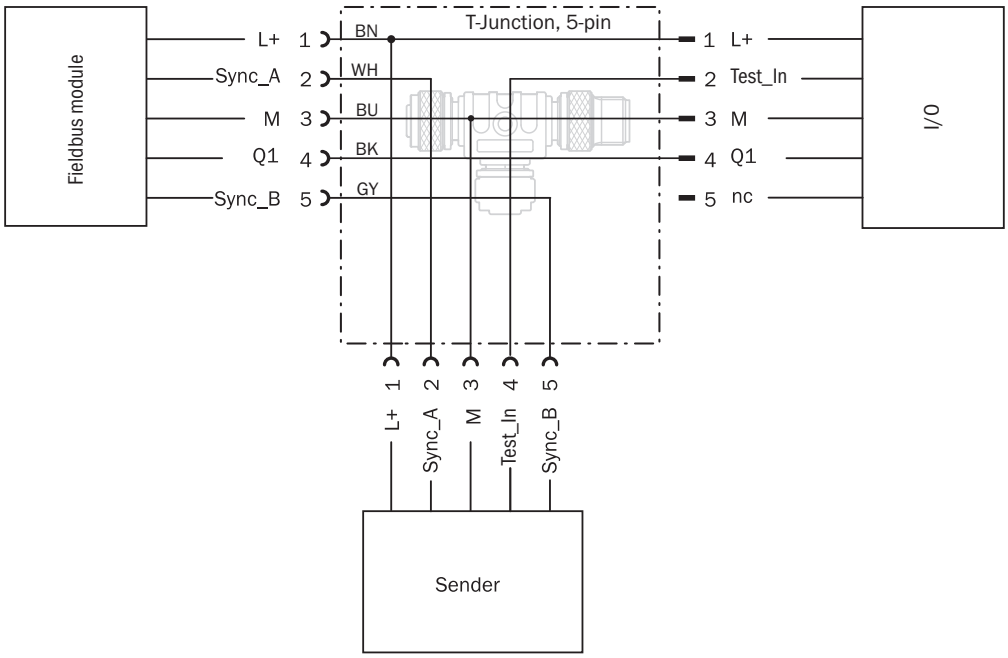

Product definition

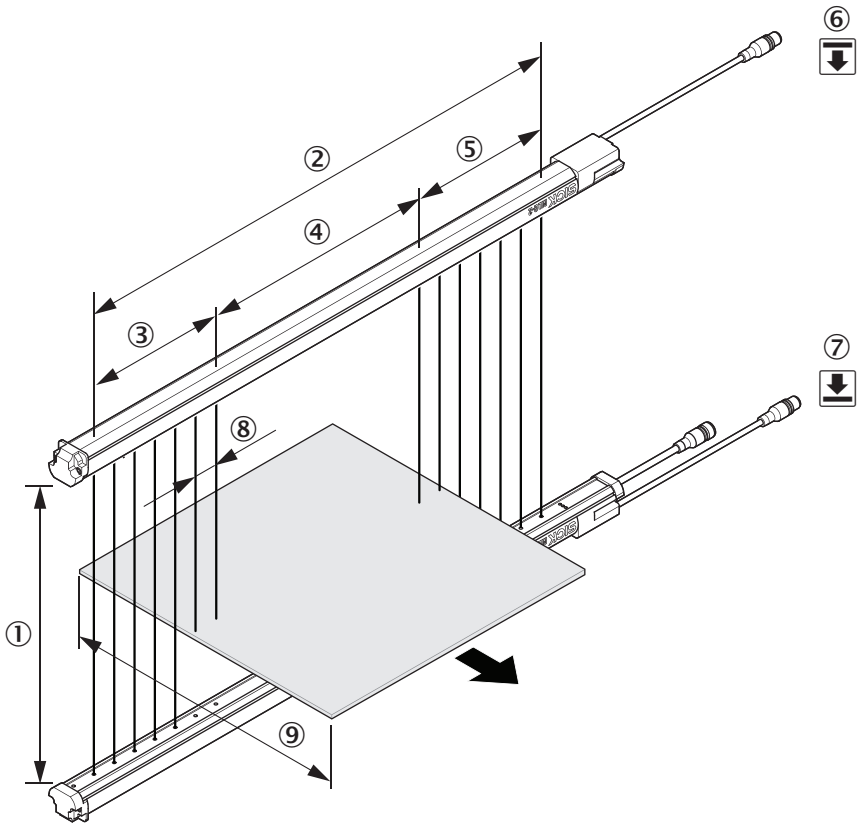

① operating range
② total measuring field width
③ measuring field width (head side)
④ Blind zone (medium range)
⑤ measuring field width (connection side)
⑥ sender
⑦ receiver
⑧ Beam separation
⑨ minimum object length

Recommended accessories

Other models and accessories ➜ www.sick.com/MLG-2_WebChecker

	Brief description	Type	part no.
connectors and cables			
	• **Connection type head A:** Female connector, M12, 5-pin, A-coded • **Connection type head B:** Female connector, M12, 5-pin, A-coded • **Connection type head C:** Male connector, M12, 4-pin, A-coded • **Description:** Unshielded	SBO-02G12-SM	6029305
	• **Connection type head A:** Male connector, M12, 4-pin, D-coded • **Connection type head B:** Male connector, M12, 4-pin, D-coded • **Signal type:** Ethernet • **Cable:** 5 m, 4-wire, PUR, halogen-free • **Description:** Ethernet, twisted pair, shielded • **Permitted cross-section:** ≥ 0.25 mm² • **Application:** Zones with oils and lubricants	YM2D24-050EA2M2D24	6034422
	• **Connection type head A:** Female connector, M12, 5-pin, straight, A-coded • **Connection type head B:** Flying leads • **Signal type:** Sensor/actuator cable • **Cable:** 5 m, 5-wire, PVC • **Description:** Sensor/actuator cable, unshielded • **Application:** Zones with chemicals, Uncontaminated zones	YF2A15-050VB5XLEAX	2096240
	• **Connection type head A:** Female connector, M12, 5-pin, straight, A-coded • **Connection type head B:** Male connector, M12, 5-pin, straight, A-coded • **Signal type:** Sensor/actuator cable • **Cable:** 5 m, 5-wire, PUR, halogen-free • **Description:** Sensor/actuator cable, unshielded • **Application:** Uncontaminated zones, Zones with oils and lubricants, Robot, Drag chain operation	YF2A15-050UB5M2A15	2096010
	• **Connection type head A:** Male connector, M12, 4-pin, straight, D-coded • **Connection type head B:** Male connector, RJ45, 4-pin, straight • **Signal type:** Ethernet, PROFINET • **Cable:** 5 m, 4-wire, PUR, halogen-free • **Description:** Ethernet, shielded, PROFINET • **Application:** Drag chain operation, Zones with oils and lubricants	YM2D24-050P-N1MRJA4	2106184
Mounting systems			
	• **Description:** Mounting bracket for external mounting of the fieldbus module, 1 × mounting bracket and 1 × M5 × 6 screw • **Material:** Stainless steel • **Details:** Stainless steel V2A (1.4301)	BEF-WN-FBM-SET1	2082322

SICK AT A GLANCE

SICK is one of the leading manufacturers of intelligent sensors and sensor solutions for industrial applications. A unique range of products and services creates the perfect basis for controlling processes securely and efficiently, protecting individuals from accidents and preventing damage to the environment.

We have extensive experience in a wide range of industries and understand their processes and requirements. With intelligent sensors, we can deliver exactly what our customers need. In application centers in Europe, Asia and North America, system solutions are tested and optimized in accordance with customer specifications. All this makes us a reliable supplier and development partner.

Comprehensive services complete our offering: SICK LifeTime Services provide support throughout the machine life cycle and ensure safety and productivity.

For us, that is "Sensor Intelligence."

WORLDWIDE PRESENCE:

Contacts and other locations –www.sick.com

SICK
Sensor Intelligence.