Data sheet

GL2S-N0311S14

G2

PHOTOELECTRIC SENSORS

SICK
Sensor Intelligence.

Illustration may differ

Ordering information

Type	part no.
GL2S-N0311S14	1113643

Other models and accessories ➜ www.sick.com/G2

Detailed technical data

Features

Functional principle	Photoelectric retro-reflective sensor
Functional principle detail	With minimum distance to reflector (dual lens system)
Dimensions (W x H x D)	7.7 mm x 21.8 mm x 13.5 mm
Housing design (light emission)	Rectangular
Sensing range max.	0.02 m ... 3 m [1]
Sensing range	0.03 m ... 2.5 m [1]
Type of light	Visible red light
Light source	PinPoint LED [2]
Light spot size (distance)	Ø 11 mm (250 mm)
Wave length	640 nm
Adjustment	None
Special features	Cable with special connector Typ 3M (37104-4101-G00 FL), 4-wire

[1] Reflector PL40A.
[2] Average service life: 100,000 h at T_U = +25 °C.

Mechanics/electronics

Supply voltage U_B	10 V DC ... 30 V DC [1]

[1] Limit values when operated in short-circuit protected network: max. 8 A.
[2] May not fall below or exceed U_V tolerances.
[3] Without load.
[4] Signal transit time with resistive load.
[5] With light/dark ratio 1:1.
[6] Do not bend below 0 °C.
[7] A = V_S connections reverse-polarity protected.
[8] C = interference suppression.
[9] D = outputs overcurrent and short-circuit protected.

Ripple	< 5 V_{pp} [2]
Current consumption	20 mA [3]
Switching output	NPN
Switching mode	Light/dark switching
Output current $I_{max.}$	≤ 50 mA
Response time	< 0.6 ms [4]
Switching frequency	800 Hz [5]
Connection type	Cable with special connector 3M, 4-wire, 1.25 m [6]
Cable material	Plastic, PVC
Cable diameter	Ø 3 mm
Circuit protection	A [7] C [8] D [9]
Weight	12 g
Polarisation filter	✓
Special device	✓
Housing material	Plastic, ABS
Optics material	Plastic, PMMA
Enclosure rating	IP67
Ambient operating temperature	–25 °C ... +50 °C
Ambient temperature, storage	–40 °C ... +75 °C
UL File No.	NRKH.E181493

[1] Limit values when operated in short-circuit protected network: max. 8 A.
[2] May not fall below or exceed U_V tolerances.
[3] Without load.
[4] Signal transit time with resistive load.
[5] With light/dark ratio 1:1.
[6] Do not bend below 0 °C.
[7] A = V_S connections reverse-polarity protected.
[8] C = interference suppression.
[9] D = outputs overcurrent and short-circuit protected.

Certificates

EU declaration of conformity	✓
UK declaration of conformity	✓
ACMA declaration of conformity	✓
Moroccan declaration of conformity	✓
China RoHS	✓
cULus certificate	✓
Photobiological safety (DIN EN 62471) certificate	✓

Classifications

ECLASS 5.0	27270902
ECLASS 5.1.4	27270902

ECLASS 6.0	27270902
ECLASS 6.2	27270902
ECLASS 7.0	27270902
ECLASS 8.0	27270902
ECLASS 8.1	27270902
ECLASS 9.0	27270902
ECLASS 10.0	27270902
ECLASS 11.0	27270902
ECLASS 12.0	27270902
ETIM 5.0	EC002717
ETIM 6.0	EC002717
ETIM 7.0	EC002717
ETIM 8.0	EC002717
UNSPSC 16.0901	39121528

Connection diagram Cd-464

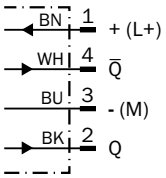

Characteristic curve GL2S

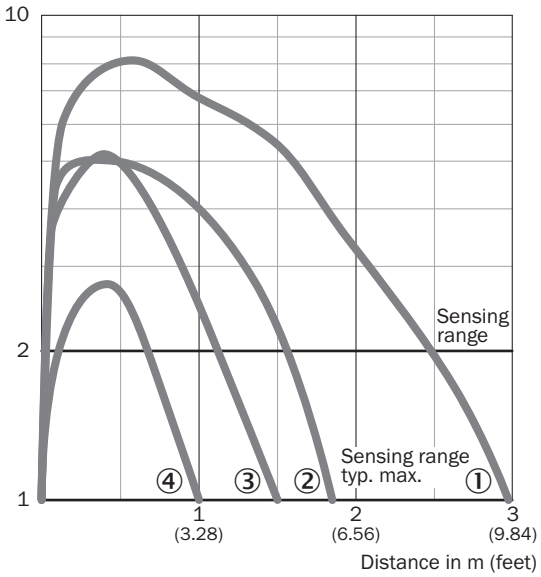

① Reflector PL40A
② Reflector PL20A
③ PL10F reflector

④ Reflective tape IREF6000 (REF-IRF-56)

Light spot size GL2S

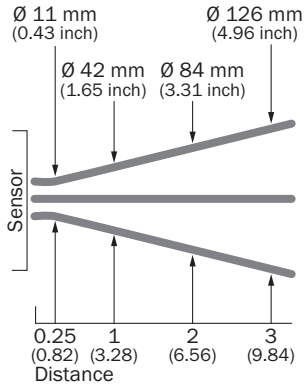

Sensing range diagram GL2S

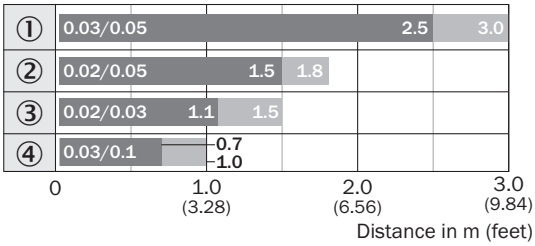

Sensing range Sensing range typ. max.

① Reflector PL40A
② Reflector PL20A
③ PL10F reflector
④ Reflective tape IREF6000 (REF-IRF-56)

Dimensional drawing

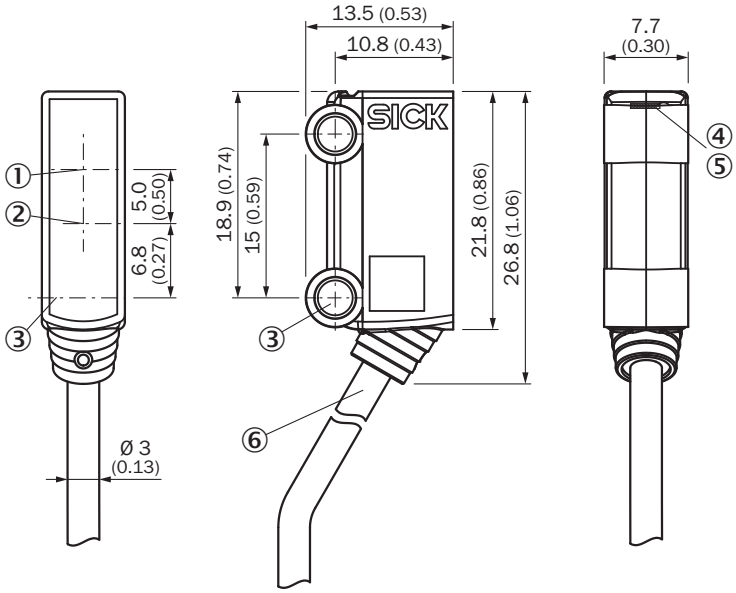

Dimensions in mm (inch)
① optical axis, receiver
② optical axis, sender
③ Mounting hole, Ø 3.2 mm
④ LED indicator green: Supply voltage active
⑤ LED indicator yellow: Status of received light beam
⑥ cable with special connector 3M, 4-wire

Recommended accessories

Other models and accessories ➜ www.sick.com/G2

	Brief description	Type	part no.
Mounting systems			
	• **Description:** Mounting bracket for floor mounting • **Material:** Steel • **Details:** Steel, zinc coated • **Items supplied:** Without mounting hardware • **Suitable for:** W2S-2	BEF-W2S-A	4034748
reflectors and optics			
	• **Description:** Fine triple reflector, screw connection, suitable for laser sensors • **Dimensions:** 20 mm 32 mm • **Ambient operating temperature:** –30 °C ... +65 °C	PL10F	5311210

	Brief description	Type	part no.
connectors and cables			
	• **Description:** Unshielded • **Connection type head A:** Male connector, M8, 4-pin, straight, A-coded • **Connection systems:** Screw-type terminals • **Permitted cross-section:** 0.14 mm² ... 0.5 mm²	STE-0804-G	6037323

SICK AT A GLANCE

SICK is one of the leading manufacturers of intelligent sensors and sensor solutions for industrial applications. A unique range of products and services creates the perfect basis for controlling processes securely and efficiently, protecting individuals from accidents and preventing damage to the environment.

We have extensive experience in a wide range of industries and understand their processes and requirements. With intelligent sensors, we can deliver exactly what our customers need. In application centers in Europe, Asia and North America, system solutions are tested and optimized in accordance with customer specifications. All this makes us a reliable supplier and development partner.

Comprehensive services complete our offering: SICK LifeTime Services provide support throughout the machine life cycle and ensure safety and productivity.

For us, that is "Sensor Intelligence."

WORLDWIDE PRESENCE:

Contacts and other locations –www.sick.com

SICK
Sensor Intelligence.