Data sheet

C4C-EC07510A10000

C4-RD

SAFETY LIGHT CURTAINS

SICK
Sensor Intelligence.

Illustration may differ

Ordering information

Type	part no.
C4C-EC07510A10000	1113212

Other models and accessories → www.sick.com/C4-RD

Detailed technical data

Features

System part	Receiver
Compatible sender	1113199
Resolution	14 mm
Scanning range	4.5 m
Protective field height	750 mm
Response time	13 ms
No blind zones	Yes
Synchronization	Optical synchronization
Items supplied	Receiver Test rod with diameter corresponding to the resolution of the safety light curtain Safety instruction Mounting instructions Operating instructions for download

Safety-related parameters

Type	Type 4 (IEC 61496-1)
Safety integrity level	SIL 3 (IEC 61508)
Category	Category 4 (ISO 13849-1)
Performance level	PL e (ISO 13849-1)
PFH_D (mean probability of a dangerous failure per hour)	3.7×10^{-9}
T_M (mission time)	20 years (ISO 13849-1)
Safe state in the event of a fault	At least one OSSD is in the OFF state.

Functions

Protective operation	✓

Interfaces

System connection	Plug, M12, 5-pin
Display elements	LEDs

Electronics

Protection class	III (IEC 61140)
Supply voltage V_S	24 V DC (19.2 V ... 28.8 V)
Ripple	≤ 10 % [1]
Power consumption typical	3.1 W (DC)
Output signal switching devices (OSSDs)	
Type of output	2 PNP semiconductors, short-circuit protected, cross-circuit monitored [2]
ON state, switching voltage HIGH	24 V DC (V_S – 2.25 V DC ... V_S)
OFF state, switching voltage LOW	≤ 2 V DC
Current-carrying capacity per OSSD	≤ 300 mA

[1] Within the limits of V_S.

[2] Applies to the voltage range between –30 V and +30 V.

Mechanics

Dimensions	See dimensional drawing
Housing material	Aluminum extruded profile
Weight	671 g (± 50 g)

Ambient data

Enclosure rating	IP65 (IEC 60529) IP67 (IEC 60529)
Ambient operating temperature	–30 °C ... +55 °C
Storage temperature	–30 °C ... +70 °C
Air humidity	15 % ... 95 %, Non-condensing
Vibration resistance	5 ... 150 Hz, 3,5 mm / 1 g (EN 60068-2-6)
Shock resistance	15 g / 6 ms (EN 60068-2-27)
Class	3M4 (IEC TR 60721-4-3)

Classifications

ECLASS 5.0	27272704
ECLASS 5.1.4	27272704
ECLASS 6.0	27272704
ECLASS 6.2	27272704
ECLASS 7.0	27272704
ECLASS 8.0	27272704
ECLASS 8.1	27272704
ECLASS 9.0	27272704
ECLASS 10.0	27272704
ECLASS 11.0	27272704
ECLASS 12.0	27272704

ETIM 5.0	EC002549
ETIM 6.0	EC002549
ETIM 7.0	EC002549
ETIM 8.0	EC002549
UNSPSC 16.0901	46171620

Certificates

EU declaration of conformity	✓
UK declaration of conformity	✓
ACMA declaration of conformity	✓
Moroccan declaration of conformity	✓
China RoHS	✓
ULus approval	✓
cUL approval	✓
Japan Press Safety certificate	✓
EC-Type-Examination approval	✓
Information according to Art. 3 of Data Act (Regulation EU 2023/2854)	✓

Dimensional drawing

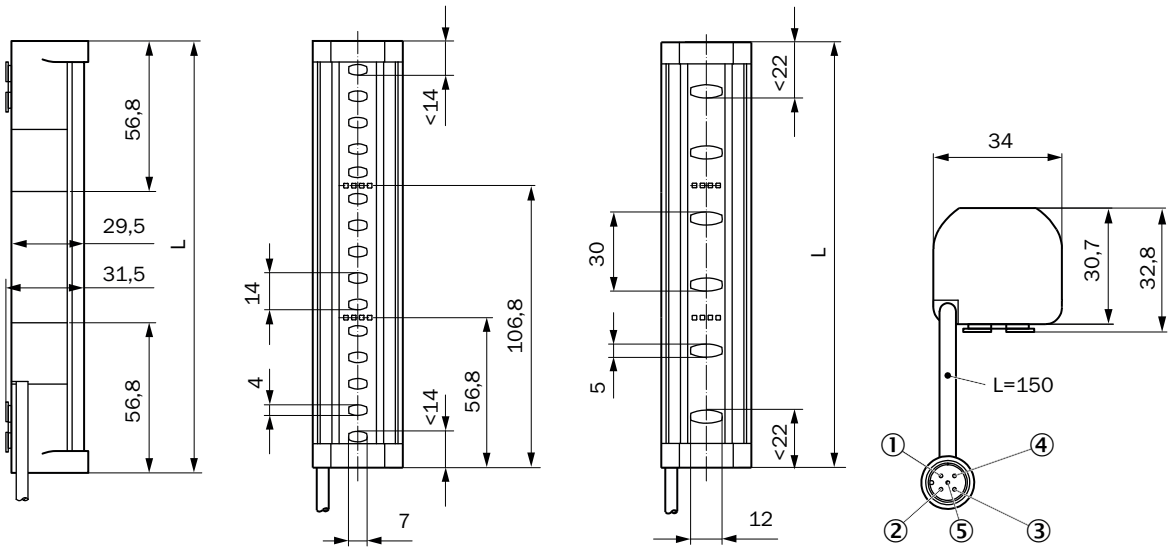

Dimensions in mm (inch)
① +24 V DC
② Sender: Reserved, receiver: OSSD1
③ 0 V DC
④ Sender: Reserved, receiver: OSSD2
⑤ Not assigned

Protective field height	L
150	163
200	213
250	263

Protective field height	L
300	313
350	363
400	413
450	463
500	513
550	563
600	613
750	763
900	913
1.050	1.063
1.200	1.213

Connection diagram C4-RD safety light curtain on RLY3-OSSD200 safety relay

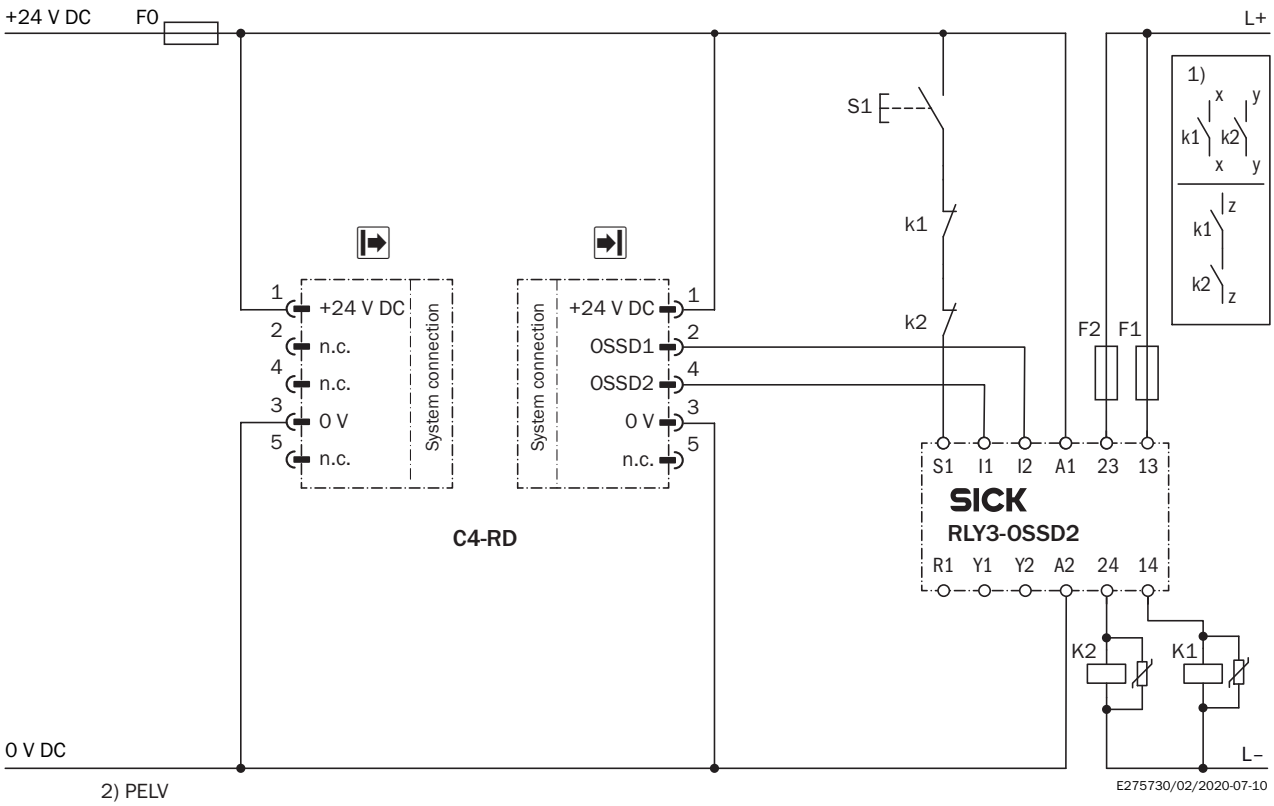

① Output circuits: These contacts must be incorporated into the control such that the dangerous state is brought to an end if the output circuit is open. For categories 4 and 3, they must be incorporated on dual-channels (x, y paths). Single-channel incorporation into the control (z path) is only possible with a single-channel control and taking the risk analysis into account.
② SELV/PELV safety/protective extra-low voltage.
Task
Connection of a C4-RD safety light curtain to a RLY3-OSSD2 safety relay. Operating mode: With restart interlock and external device monitoring.
Mode of operation
When the protective field is clear, the OSSD1 and OSSD2 outputs carry voltage. The system can be switched on when K1 and K2 are in a fault-free de-energized position. The RLY3-OSSD2 is switched on by pressing S1 (pushbutton is pressed and released). The

outputs (contacts 13-14 and 23-24) switch the K1 and K2 contactors on. When the protective field is interrupted, the OSSD1 and OSSD2 outputs switch the RLY3-OSSD2 off. Contactors K1 and K2 are switched off.
Fault analysis
Cross-circuits and short-circuits of the OSSDs are recognized and lead to the locking status (lock-out). A malfunction with one of the K1 or K2 contactors is detected. The switch-off function is retained. In the event of manipulation (e.g., jamming) of the S1 pushbutton, the RLY3-OSSD2 will not re-enable the output current circuits.

Recommended accessories

Other models and accessories ➜ www.sick.com/C4-RD

	Brief description	Type	part no.
connectors and cables			
	• **Connection type head A:** Female connector, M12, 5-pin, A-coded • **Connection type head B:** Female connector, M12, 5-pin, A-coded • **Connection type head C:** Male connector, M12, 5-pin, A-coded • **Description:** Unshielded	DSC-1205T000025KM0	6030664
	• **Connection type head A:** Female connector, M12, 5-pin, straight, A-coded • **Connection type head B:** Male connector, M12, 5-pin, straight, A-coded • **Signal type:** Sensor/actuator cable • **Cable:** 2 m, 5-wire, PUR, halogen-free • **Description:** Sensor/actuator cable, unshielded • **Application:** Drag chain operation, Zones with oils and lubricants, Robot, Drag chain operation	YF2A15-020UB5M2A15	2096009
	• **Connection type head A:** Female connector, M12, 5-pin, straight, A-coded • **Connection type head B:** Flying leads • **Signal type:** Sensor/actuator cable • **Cable:** 2 m, 5-wire, PUR, halogen-free • **Description:** Sensor/actuator cable, unshielded • **Application:** Drag chain operation, Zones with oils and lubricants, Robot, Drag chain operation	YF2A15-020UB5XLEAX	2095617
	• **Connection type head A:** Female connector, M12, 5-pin, straight, A-coded • **Connection type head B:** Male connector, M12, 5-pin, straight, A-coded • **Signal type:** Sensor/actuator cable • **Cable:** 5 m, 5-wire, PUR, halogen-free • **Description:** Sensor/actuator cable, unshielded • **Application:** Drag chain operation, Zones with oils and lubricants, Robot, Drag chain operation	YF2A15-050UB5M2A15	2096010
	• **Connection type head A:** Female connector, M12, 5-pin, straight, A-coded • **Connection type head B:** Flying leads • **Signal type:** Sensor/actuator cable • **Cable:** 5 m, 5-wire, PUR, halogen-free • **Description:** Sensor/actuator cable, unshielded • **Application:** Drag chain operation, Zones with oils and lubricants, Robot, Drag chain operation	YF2A15-050UB5XLEAX	2095618
	• **Connection type head A:** Female connector, M12, 5-pin, straight, A-coded • **Connection type head B:** Male connector, M12, 5-pin, straight, A-coded • **Signal type:** Sensor/actuator cable • **Cable:** 10 m, 5-wire, PUR, halogen-free • **Description:** Sensor/actuator cable, unshielded • **Application:** Drag chain operation, Zones with oils and lubricants, Robot, Drag chain operation	YF2A15-100UB5M2A15	2096011
	• **Connection type head A:** Female connector, M12, 5-pin, straight, A-coded • **Connection type head B:** Flying leads • **Signal type:** Sensor/actuator cable • **Cable:** 10 m, 5-wire, PUR, halogen-free • **Description:** Sensor/actuator cable, unshielded • **Application:** Drag chain operation, Zones with oils and lubricants, Robot, Drag chain operation	YF2A15-100UB5XLEAX	2095619

	Brief description	Type	part no.
Mounting systems			
	• **Description:** Swivel mount bracket for 2 devices (e.g. sender or receiver), 360° alignment possible, consisting of swivel mount port and swivel mount adapter, including M5 screw • **Material:** Plastic • **Details:** Plastic • **Packing unit:** 4 pieces	BEF-2SMJEPKU4	2118584
	• **Description:** Flat mount bracket comprising two A brackets and two B brackets for two devices (e.g., sender and receiver) • **Dimensions (W x H x L):** 34 mm x 51.7 mm x 5 mm • **Material:** Plastic • **Details:** Plastic • **Packing unit:** 4 pieces	BEF-3SHAHPKU4	2118327
	• **Description:** FlexFix bracket for 2 devices (e.g. sender and receiver), can be aligned ± 15°, including M5 screw • **Material:** Plastic • **Details:** Plastic • **Packing unit:** 4 pieces	BEF-1SHABPKU4	2066614
	• **Description:** QuickFix bracket for 2 devices (e.g. sender and receiver) • **Material:** Plastic • **Details:** Plastic • **Packing unit:** 4 pieces	BEF-3SHABPKU4	2098710
	• **Description:** Compact FlexFix bracket for 2 devices (e.g. sender and receiver), can be aligned ± 15°, including M5 screw, for mounting with countersunk screws • **Material:** Plastic • **Details:** Plastic • **Packing unit:** 4 pieces	BEF-1SHTBPKU4	2117731
Safety relays			
	• **Applications:** Evaluation unit • **Compatible sensor types:** Safety sensors with OSSDs • **Connection type:** Front connector with spring terminals • **Restart interlock:** yes • **External device monitoring (EDM):** Integrated • **Outputs:** 2 enabling current paths (safe), 2 application diagnostic outputs (not safe), 1 test pulse output (not safe) • **Housing width:** 18 mm	RLY3-OSSD200	1085344
	• **Applications:** Evaluation unit • **Compatible sensor types:** Safety sensors with OSSDs • **Connection type:** Front connector with spring terminals • **Restart interlock:** yes • **External device monitoring (EDM):** Integrated • **Outputs:** 3 enabling current paths (safe), 2 application diagnostic outputs (not safe), 1 test pulse output (not safe) • **Housing width:** 18 mm	RLY3-OSSD300	1099969

SICK AT A GLANCE

SICK is one of the leading manufacturers of intelligent sensors and sensor solutions for industrial applications. A unique range of products and services creates the perfect basis for controlling processes securely and efficiently, protecting individuals from accidents and preventing damage to the environment.

We have extensive experience in a wide range of industries and understand their processes and requirements. With intelligent sensors, we can deliver exactly what our customers need. In application centers in Europe, Asia and North America, system solutions are tested and optimized in accordance with customer specifications. All this makes us a reliable supplier and development partner.

Comprehensive services complete our offering: SICK LifeTime Services provide support throughout the machine life cycle and ensure safety and productivity.

For us, that is "Sensor Intelligence."

WORLDWIDE PRESENCE:

Contacts and other locations –www.sick.com

SICK
Sensor Intelligence.