Data sheet

MLG05W-0600B12599

MLG-2 WebChecker

AUTOMATION LIGHT GRIDS

SICK
Sensor Intelligence.

Illustration may differ

Ordering information

Type	part no.
MLG05W-0600B12599	1110491

Other models and accessories ➜ www.sick.com/MLG-2_WebChecker

Detailed technical data

Features

Device version	Web guiding
Sensor principle	Sender/receiver
Minimum object length	4 mm [1]
Beam separation	5 mm
Resolution	0.1 mm
Cycle time	32 µs per beam
Repeatability	6 µm [2]
Accuracy	± 0.3 mm [3]
Type of synchronization	Cable
Number of beams	180
Total measuring field width	895 mm
Measuring field width detailed	
Measuring field width (connection side)	895 mm
Blind zone (medium range)	0 mm
Measuring field width (head side)	0 mm
Software features (default)	
Q_1/C	Alarm, general
Q_2	Standard teach-in
Q_{A1}	Position edge 1, descending
Q_{A2}	Edge position 1, rising
Application	Web edge, opaque
Included with delivery	1 × sender 1 × receiver 4/6 x QuickFix brackets (6 x QuickFix brackets for monitoring heights above 2 m) 1 × Quick Start Guide

[1] See graphic: product definition.
[2] 1 sigma, 0% object transmission (sensor internal value).
[3] Typical 0.1 mm. For opaque objects and exact alignment of sender/receiver.

Mechanics/electronics

Light source	LED, Infrared light
Wave length	850 nm
Supply voltage V_s	DC 19.2 V ... 28.8 V [1]
Power consumption sender	64 mA [2]
Power consumption receiver	156 mA [2]
Ripple	< 5 V_{pp}
Output current $I_{max.}$	100 mA
Output load, capacitive	100 nF
Output load, Inductive	1 H
Initialization time	< 1 s
Switching output	Push-pull: PNP/NPN
Dimensions (W x H x D)	34 mm x 979.4 mm x 30.6 mm
Connection type	Plug, M12, 5-pin, 0.22 m Male connector M12, 8-pin, 0.27 m M12 female connector, 4-pin, D-coded, 0.19 m
Housing material	Aluminum
Display	LED
Enclosure rating	IP65, IP67 [3]
Circuit protection	U_V connections, reverse polarity protected Output Q short-circuit protected Interference pulse suppression
Protection class	III
Weight	2.059 kg
Front screen	PMMA
Option	None
UL File No.	NRKH.E181493

[1] Without load.
[2] Without load with 24 V.
[3] Operating in outdoor condition only with a external protection housing.

Performance

Maximum range	3.5 m [1]
Minimum range	≥ 0.2 m
Operating range	2.5 m
Response time	36.7 ms [2]

[1] No reserve for environmental issue and deterioration of the diode.
[2] With resistive load.

Interfaces

IO-Link	✓ , IO-Link V1.1
Data transmission rate	230,4 kbit/s (COM3)

[1] For an IO-Link master with V1.0, reverts to interleaved mode (consisting of TYPE_1_1 (ProcessData) and TYPE_1_2 (on-request data)).

Maximum cable length	20 m
Cycle time	3 ms
VendorID	26
DeviceID HEX	80022F
DeviceID DEC	8389167
Process data length	32 Byte (TYPE_2_V) [1]
Analog	✓ , Current
Inputs/outputs	2 x analog + 2 x Q (IO-Link)
Analog output	Q_{A1}, Q_{A2}
Number	2
Type	Current output
Current	4 mA ... 20 mA
Digital output	Q_1, Q_2
Number	2
Digital input	Q_2
Number	1

[1] For an IO-Link master with V1.0, reverts to interleaved mode (consisting of TYPE_1_1 (ProcessData) and TYPE_1_2 (on-request data)).

Ambient data

Shock resistance	Continuous shocks 10 g, 16 ms, 1000 shocks Single shocks 15 g, 11 ms 3 per axle
Vibration resistance	Sinusoidal oscillation 10-150 Hz 5 g
Ambient light immunity	100,000 lx
Ambient operating temperature	–30 °C ... +55 °C
Ambient temperature, storage	–40 °C ... +70 °C

Smart Task

Smart Task name	Base logics

Classifications

ECLASS 5.0	27270910
ECLASS 5.1.4	27270910
ECLASS 6.0	27270910
ECLASS 6.2	27270910
ECLASS 7.0	27270910
ECLASS 8.0	27270910
ECLASS 8.1	27270910
ECLASS 9.0	27270910
ECLASS 10.0	27270910
ECLASS 11.0	27270910
ECLASS 12.0	27270910
ETIM 5.0	EC002549
ETIM 6.0	EC002549
ETIM 7.0	EC002549

ETIM 8.0	EC002549
UNSPSC 16.0901	39121528

Dimensional drawing

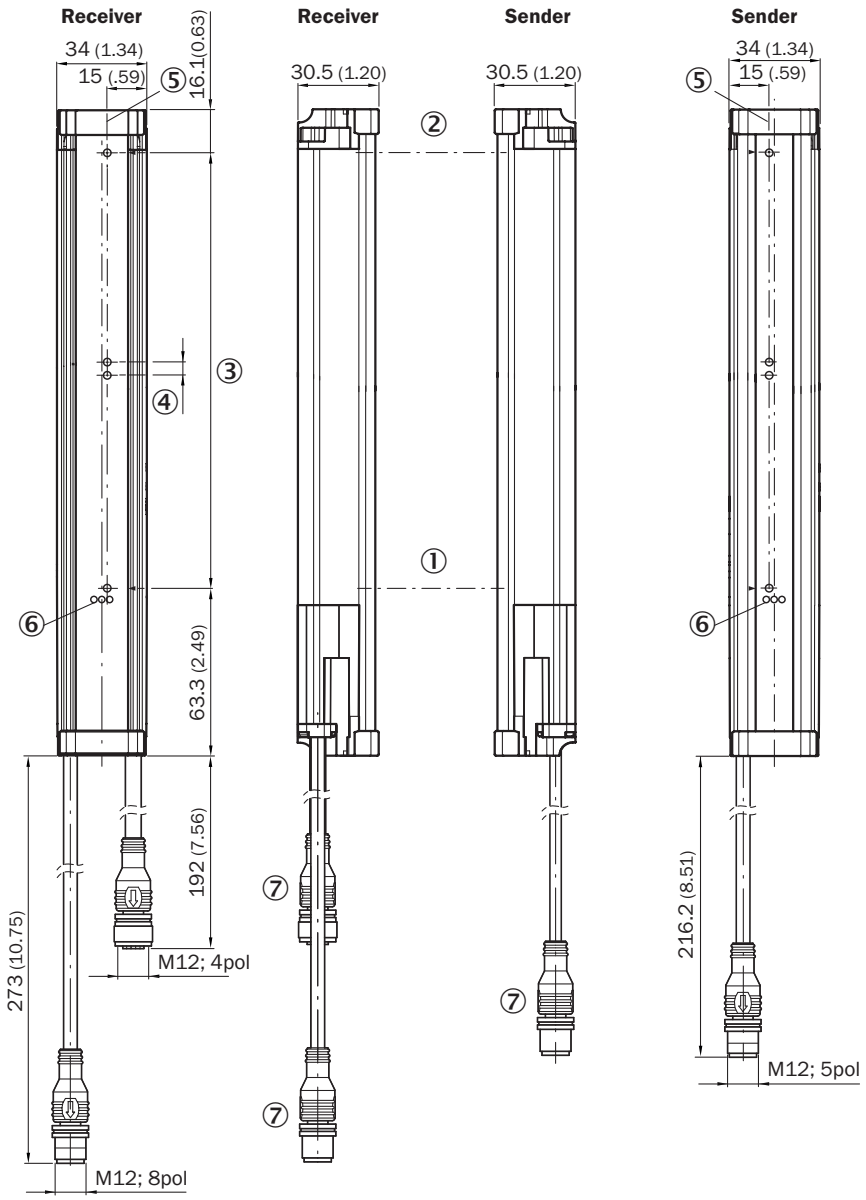

Dimensions in mm (inch)
① First beam
② last beam
③ total measuring field width (see technical data)
④ Beam separation
⑤ Optical axis
⑥ status indicator: green, yellow, red LEDs
⑦ Connection

Connection type and diagram MLG-2 WebChecker

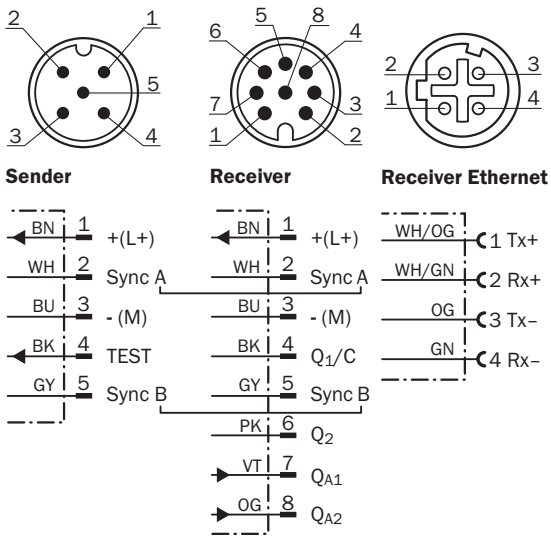

Adjustments

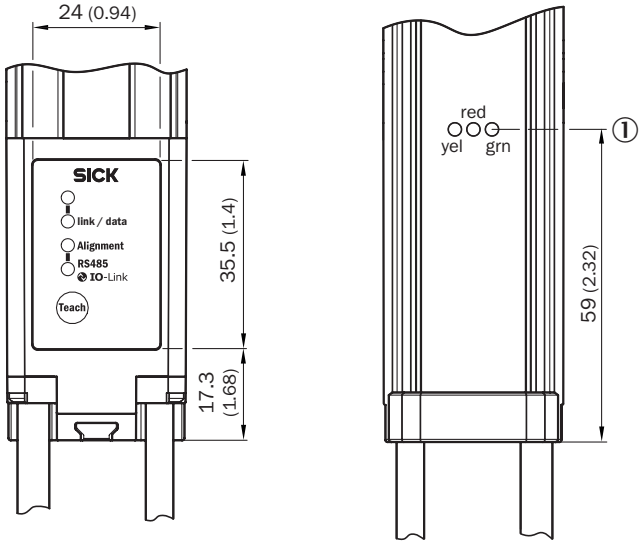

① status indicator: green, yellow, red LEDs

Connection diagram T-piece

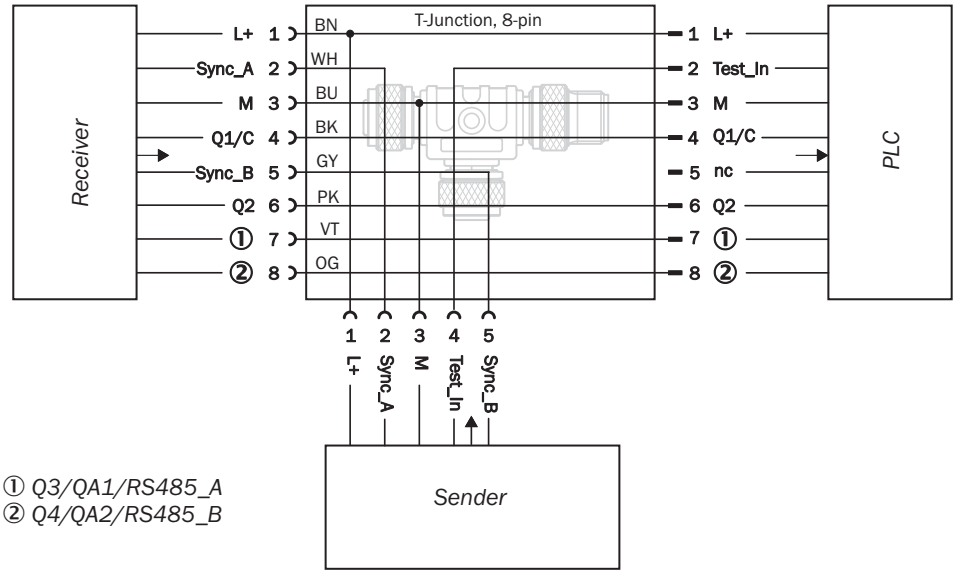

① *Q3/QA1/RS485_A*
② *Q4/QA2/RS485_B*

Product definition

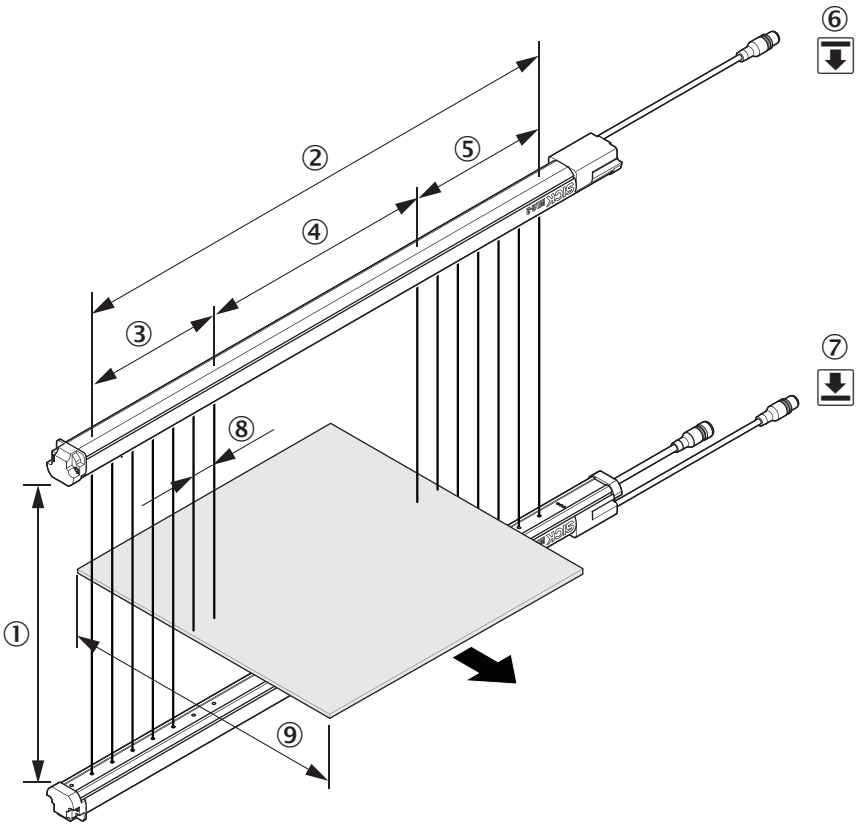

① operating range
② total measuring field width
③ measuring field width (head side)
④ Blind zone (medium range)
⑤ measuring field width (connection side)

⑥ sender
⑦ receiver
⑧ Beam separation
⑨ minimum object length

Recommended accessories

Other models and accessories ➜ www.sick.com/MLG-2_WebChecker

	Brief description	Type	part no.
connectors and cables			
	• **Connection type head A:** Female connector, M12, 8-pin, straight • **Connection type head B:** Flying leads • **Signal type:** Sensor/actuator cable • **Cable:** 5 m, 8-wire, PVC • **Description:** Sensor/actuator cable, special color code, shielded • **Connection systems:** Flying leads • **Application:** Uncontaminated zones, Zones with chemicals	DOL-1208-G05MF	6020664
	• **Description:** Unshielded • **Connection type head A:** Female connector, M12, 5-pin, A-coded • **Connection type head B:** Female connector, M12, 8-pin, A-coded • **Connection type head C:** Male connector, M12, 8-pin, A-coded • **Note:** For connecting of a PLC	SBO-02F12-SM1	6053172
	• **Connection type head A:** Female connector, M12, 5-pin, straight, A-coded • **Connection type head B:** Male connector, M12, 5-pin, straight, A-coded • **Signal type:** Sensor/actuator cable • **Cable:** 2 m, 5-wire, PUR, halogen-free • **Description:** Sensor/actuator cable, unshielded • **Application:** Drag chain operation, Zones with oils and lubricants, Robot, Drag chain operation	YF2A15-020UB5M2A15	2096009
	• **Connection type head A:** Female connector, M12, 8-pin, straight, A-coded • **Connection type head B:** Male connector, M12, 8-pin, straight, A-coded • **Signal type:** Sensor/actuator cable • **Cable:** 2 m, 8-wire, PUR, halogen-free • **Description:** Sensor/actuator cable, shielded • **Application:** Drag chain operation, Zones with oils and lubricants, Robot, Drag chain operation	YF2A28-020UA6M2A28	2096105
	• **Connection type head A:** Male connector, M12, 4-pin, straight, D-coded • **Connection type head B:** Male connector, RJ45, 4-pin, straight • **Signal type:** Ethernet, PROFINET • **Cable:** 2 m, 4-wire, PUR, halogen-free • **Description:** Ethernet, shielded, PROFINET • **Application:** Drag chain operation, Zones with oils and lubricants	YM2D24-020P-N1MRJA4	2106182

	Brief description	Type	part no.
network devices			
		SIG350-0004AP100	6076871
		SIG350-0005AP100	6076923
		SIG350-0006AP100	6076924

SICK AT A GLANCE

SICK is one of the leading manufacturers of intelligent sensors and sensor solutions for industrial applications. A unique range of products and services creates the perfect basis for controlling processes securely and efficiently, protecting individuals from accidents and preventing damage to the environment.

We have extensive experience in a wide range of industries and understand their processes and requirements. With intelligent sensors, we can deliver exactly what our customers need. In application centers in Europe, Asia and North America, system solutions are tested and optimized in accordance with customer specifications. All this makes us a reliable supplier and development partner.

Comprehensive services complete our offering: SICK LifeTime Services provide support throughout the machine life cycle and ensure safety and productivity.

For us, that is "Sensor Intelligence."

WORLDWIDE PRESENCE:

Contacts and other locations –www.sick.com

SICK
Sensor Intelligence.