Data sheet

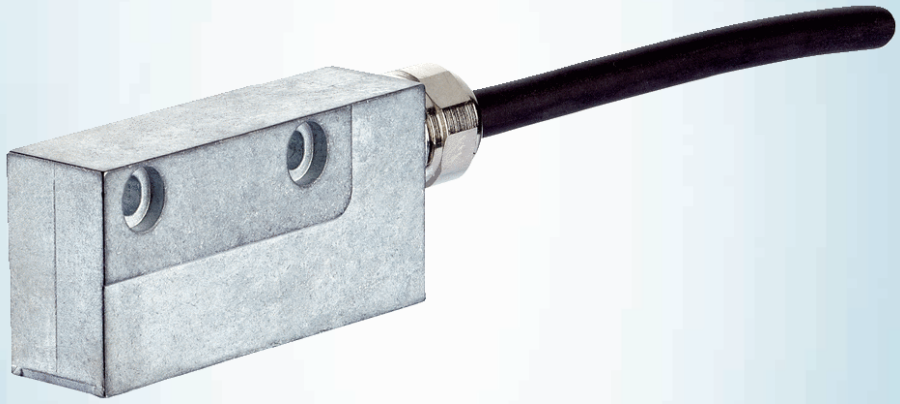

TTK50S-HXM0-K02

TTK50-S

SAFE MOTOR FEEDBACK SYSTEMS

SICK
Sensor Intelligence.

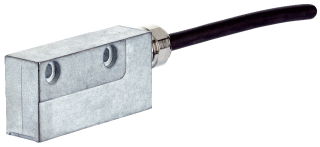

Illustration may differ

Ordering information

Type	part no.
TTK50S-HXM0-K02	1099699

Other models and accessories ➜ www.sick.com/TTK50-S

Detailed technical data

Features

Items supplied	Magnetic tape not included with delivery

Safety-related parameters

Safety integrity level	SIL 2 (IEC 61508), SILCL2 (EN 62061) [1]
Category	3 (EN ISO 13849)
Maximum demand rate	Continuous (analog signals)
Performance level	PL d (EN ISO 13849)
PFH (mean probability of a dangerous failure per hour)	2.02×10^{-8} [2]
T_M (mission time)	20 years (EN ISO 13849)
Safety-related accuracy	± 25 mm, = ± 1/4 pin length
Safety-related measuring step	0.25 mm

[1] For more detailed information on the exact configuration of your machine/unit, please consult your relevant SICK branch office.
[2] The values displayed apply to a diagnostic degree of coverage of 90%, which must be achieved by the external drive system.

Performance

Measuring step	0.244 µm For interpolation of the sine/cosine signals with, e. g., 12 bits
Measuring range	0 mm ... 940 mm
Resolution	1 µm
Length of period	1 mm
Traversing speed	1.3 m/s, ≤ 10 m/s up to which the absolute position can be reliably produced, dynamic operation (Sin/Cos)
Repeatability	< 5 µm
System accuracy	± 10 µm (+20 °C)
Measured value backlash	< 10 µm

Interfaces

Communication interface	HIPERFACE®
Code type	Binary
Available memory area	1,972 Byte (E^2PROM 2048)

Electronics

Supply voltage	7 V DC ... 12 V DC
Recommended supply voltage	8 V DC
Operating current	≤ 55 mA (without load) [1]
Connection type	Cable, 8-wire (4 x 2 x 0.15 mm²), 5 m

[1] 100 mA approx. during adjustment.

Mechanics

Dimensions	See dimensional drawing
Scope of delivery	Magnetic tape not included with delivery
Weight	0.06 kg, without cable
Read head material	Zinc diecast

Ambient data

EMC	According to EN 61000-6-2 and EN 61000-6-3 [1]
Enclosure rating	IP67, with mating plug inserted (IEC 60529)
Operating temperature range	–30 °C ... +80 °C
Storage temperature range	–40 °C ... +85 °C, without package
Permissible relative humidity	100 %, condensation permitted
Operating height (above sea level)	2,000 m
Resistance to shocks	30 g, 6 ms (EN 60068-2-27)
Resistance to vibration	20 g, 10 Hz ... 2,000 Hz (EN 60068-2-6)
Maximum permitted ambient field strength	< 3 kA/m ... 4 kA/m (3.8 mT ... 5 mT), to guarantee compliance with the quoted accuracy values [2]
Maximum permitted field strength	< 150 kA/m (< 190 mT), to ensure that the magnetic tape is not permanently damaged

[1] According to the listed standards, EMC is guaranteed if the motor feedback system is connected to the central grounding point of the motor controller via a cable shield and the encoder housing lays over a large area of the motor potential. If other shielding concepts are used, users must perform their own test.
[2] The maximum permitted external field influence is reached when the position value deviates from the original value (without external field influence) by more than 5 µm. This value is reached when, at the sensor location, a field strength of 3 kA/m to 4 kA/m (3.8 mT to 5 mT) occurs in addition to the field strength of the magnetic tape.

Certificates

EU declaration of conformity	✓
UK declaration of conformity	✓
ACMA declaration of conformity	✓
China RoHS	✓
EC-Type-Examination approval	✓
Information according to Art. 3 of Data Act (Regulation EU 2023/2854)	✓

Classifications

ECLASS 5.0	27270590
ECLASS 5.1.4	27270590
ECLASS 6.0	27270590
ECLASS 6.2	27270590
ECLASS 7.0	27270590

ECLASS 8.0	27270590
ECLASS 8.1	27270590
ECLASS 9.0	27270590
ECLASS 10.0	27273805
ECLASS 11.0	27273902
ECLASS 12.0	27273902
ETIM 5.0	EC001486
ETIM 6.0	EC001486
ETIM 7.0	EC001486
ETIM 8.0	EC001486
UNSPSC 16.0901	41112113

Dimensional drawing Read head

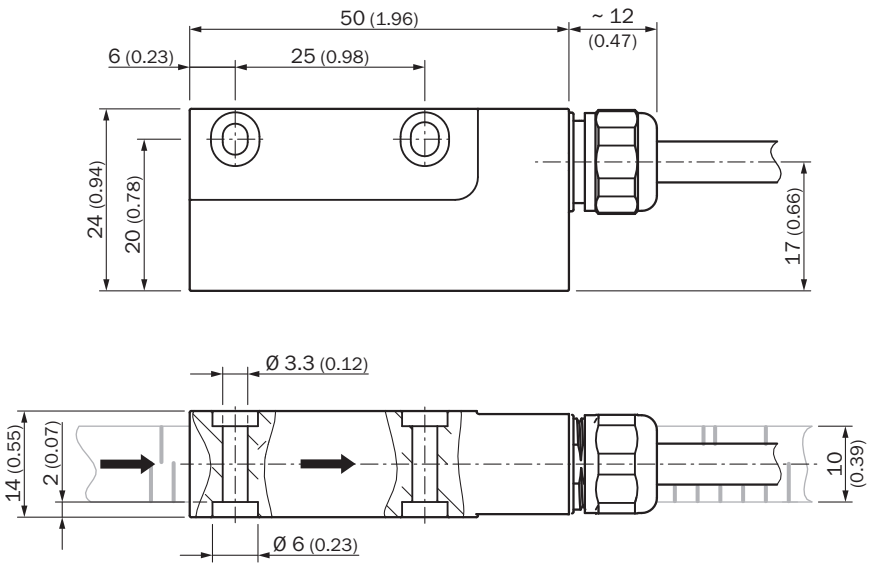

Dimensions in mm (inch)

Order note for magnetic tape length

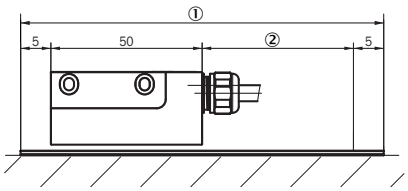

① Required band length = measurement path + 60 mm
② Measurement path

Anschlussbelegung

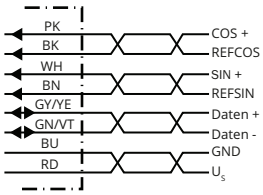

Wire colors (cable connection)	Signal	Explanation
Brown	REFSIN	Process data channel
White	+ SIN	Process data channel
Black	REFCOS	Process data channel
Pink	+ COS	Process data channel
Gray or yellow	Data +	Parameter channel RS 485
Green or purple	Data -	Parameter channel RS 485
Blue	GND	Ground connection
Red	U_S	Supply voltage
Shielding	–	Housing

Position tolerance

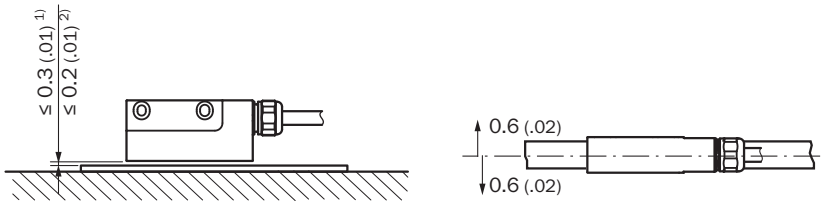

General tolerances according to DIN ISO 2768-mk
① Without cover strip
② With cover strip

Operation note Overview of supported commands for HIPERFACE®

Overview of supported commands			TTK50/TTK70
Command byte	**Function**	**Code 0 [1]**	**Comments**
42h	Read position (5 bits per sine/cosine period)		31,25 µm
43h	Set position	■	
44h	Read analog value		Channel number 48h
			Temperature [°C] [2]
46h	Read counter		
47h	Increase counter		
49h	Reset counter	■	
4Ah	Read data		
4Bh	Save data		
4Ch	Determine status of a data field		
4Dh	Create data field		
4Eh	Determine available memory area		
4Fh	Change access code		
50h	Read encoder status		
52h	Read out name plate		Encoder type = FFh
53h	Encoder reset		
55h	Allocate encoder address	■	
56h	Read serial number and program version		
57h	Configure serial interface	■	
67h	Change serial interface temporary		
6Ah	Set position with interanal synchronization	■	
6Bh	Sensor adjustment (during commissioning)	■	

[1] The commands thus marked include the parameter 'Code 0'. Code 0 is a byte inserted into the protocol to provide additional protection of vital system parameters against accidental overwriting. When the device is supplied, 'Code 0' = 55h.

[2] The temperature value will be reliably formed approx. 2 s after power on/reset or at command.

Operation note Overview of status messages for HIPERFACE®

Error type	Status code	Description	TTK50/TTK70
	00h	The encoder has recognized no error	■
Initialization	01h	Adjustment data faulty	■
	02h	Faulty internal angular offset	■
	03h	Data field partitioning table destroyed	■
	04h	Analog limit values not available	■
	05h	Internal I^2C bus not operational	■
	06h	Internal checksum error	■
Protocol	09h	Parity error	■
	0Ah	Checksum of the data transmitted data is incorrect	■
	0Bh	Unknown command code	■
	0Ch	Number of data transmitted is incorrect	■
	0Dh	Command argument transmitted is not allowed	■
Data	0Eh	The selected data field may not be written to	■
	0Fh	Incorrect access code	■
	10h	Size of data field stated cannot be changed	■
	11h	Word address states, is outside data field	■
	12h	Access to non-existent data field	■
Position	20h	Sensor is not adjusted or is in adjustment mode	■
	21h	Distance magnetic tape/sensor too high	■
	23h	Positional error	■
Other	1Ch	Monitoring the value of analog signals (process data)	■
	1Eh	Encoder temperature critical	■
	08h	Counter overflow	■

For more information on the interface see HIPERFACE® - description, part no. 8010701

Operation note Model-specific settings

Type-specific settings	TTK50/TTK70
Model ID (command 52h)	FFh
Free E^2PROM [bytes]	1.792
Address	40h
Mode_485[1)]	E4h
Codes 0 to 3	55h
Counter	0

1) The linear length measuring system supports the following baud rates: 9600, 19200 and 38400.

Operation note Charactersitics applicable to all permissible environmental conditions

Signal	Values/unit
Signal peak, peak V_{SS} of SIN, COS	0.9 V ... 1.1 V
Signal offset REFSIN, REFCOS	2.2 V ... 2.8 V

Recommended accessories

Other models and accessories ➜ www.sick.com/TTK50-S

	Brief description	Type	part no.
connectors and cables			
	• **Connection type head A:** Female connector, DUBOX, 8-pin, straight • **Connection type head B:** Male connector, M23, 17-pin, straight • **Signal type:** HIPERFACE® • **Cable:** 1 m, 8-wire • **Description:** HIPERFACE®, unshielded	DSL-2317-G01MJB1	2071326
	• **Connection type head A:** Female connector, M23, 12-pin, straight • **Connection type head B:** Male connector, M23, 17-pin, straight • **Signal type:** HIPERFACE® • **Cable:** 1 m, 8-wire • **Description:** HIPERFACE®, unshielded	DSL-2317-G01MJB2	2071328
	• **Connection type head A:** Female connector, JST, 8-pin, straight • **Connection type head B:** Male connector, M23, 17-pin, straight • **Signal type:** HIPERFACE® • **Cable:** 1 m, 8-wire • **Description:** HIPERFACE®, unshielded	DSL-2317-G01MJB6	2071327
	• **Connection type head A:** Female connector, M12, 8-pin, straight • **Connection type head B:** Male connector, M23, 17-pin, straight • **Signal type:** HIPERFACE® • **Cable:** 1 m, 8-wire • **Description:** HIPERFACE®, unshielded	DSL-2317-G01MJC1	2071329
	• **Connection type head A:** Female connector, terminal box, 8-pin, straight • **Connection type head B:** Male connector, M23, 17-pin, straight • **Signal type:** HIPERFACE® • **Cable:** 1 m, 8-wire • **Description:** HIPERFACE®, unshielded	DSL-2317-G01MJC6	2071330
	• **Connection type head A:** Female connector, M12, 8-pin, straight • **Connection type head B:** Female connector, M23, 12-pin, straight • **Signal type:** HIPERFACE® • **Cable:** 1 m, 8-wire • **Description:** HIPERFACE®, unshielded	YF2AA8-010S01M23BE	2109107
	• **Description:** Shielded • **Connection type head A:** Female connector, M12, 8-pin, straight, A-coded • **Connection systems:** Screw-type terminals • **Permitted cross-section:** 0.25 mm² ... 0.5 mm²	DOS-1208-GA	6028369
	• **Description:** Shielded • **Connection type head A:** Male connector, M12, 8-pin, straight, A-coded • **Connection systems:** Screw-type terminals • **Permitted cross-section:** ≤ 0.5 mm²	STE-1208-GA	6028370
	• **Description:** Incremental, shielded, SSI • **Connection type head A:** Female connector, M12, 8-pin, straight, A-coded • **Signal type:** Incremental, SSI • **Cable:** CAT5, CAT5e • **Connection systems:** IDC quick connection • **Permitted cross-section:** 0.14 mm² ... 0.34 mm²	DOS-1208-GA01	6045001
	• **Description:** Ethernet, shielded • **Connection type head A:** Female connector, M12, 8-pin, angled, A-coded • **Signal type:** Ethernet • **Cable:** CAT5, CAT5e • **Connection systems:** QUICKON connection • **Permitted cross-section:** 0.14 mm² ... 0.34 mm²	DOS-1208-WA	6043358
	• **Description:** Incremental, shielded • **Connection type head A:** Male connector, M12, 8-pin, straight, A-coded • **Signal type:** Incremental • **Cable:** CAT5, CAT5e • **Connection systems:** IDC quick connection • **Permitted cross-section:** 0.14 mm² ... 0.34 mm²	STE-1208-GA01	6044892
	• **Connection type head A:** Flying leads	LTG-2708-MW	6028361

	Brief description	Type	part no.
	• **Connection type head B:** Flying leads • **Signal type:** HIPERFACE®, HIPERFACE® • **Items supplied:** By the meter • **Cable:** 8-wire, PUR, halogen-free • **Description:** HIPERFACE®, shielded, HIPERFACE®		
magnets			
	• **Product segment:** Magnets • **Product:** Magnetic tapes • **Description:** Magnetic tape length: 1 m, magnetic tape width: 10 mm, weight: 0.18 kg/m, magnetic tape material: 17410 hard ferrite 9/28 P, substrate tape material: steel, period length 1 mm, operating temperature range: –20 °C ... 100 °C, storage temperature range: –30 °C ... 100 °C, temperature coefficient: (11 ± 1) µm/K/m • **Material:** Covering tape: V2A, magnetic tape: 17410 hard ferrite 9/28 P, substrate tape: spring steel (11± 1) µm/K/m	MVM-1M0-2MC-MKLB	6049001
programming devices			
	• **Product segment:** Programming devices • **Product:** PGT-11-S • **Description:** SVip® LAN programming tool for all motor feedback systems • **Items supplied:** 1x programming tool PGT-11-S LAN, 1x power supply unit 100-240 V AC / 12 V DC, primary adapter (Europe, UK, USA/Japan, Australia), Ethernet cable 3 m	PGT-11-S LAN	1057324
Mounting systems			
	• **Description:** Mounting kit for SIL2 applications for safe and easy mounting of the TTK50S; 2x countersunk head screws, 1x mounting plate	BEF-MK-S13	2109583

SICK AT A GLANCE

SICK is one of the leading manufacturers of intelligent sensors and sensor solutions for industrial applications. A unique range of products and services creates the perfect basis for controlling processes securely and efficiently, protecting individuals from accidents and preventing damage to the environment.

We have extensive experience in a wide range of industries and understand their processes and requirements. With intelligent sensors, we can deliver exactly what our customers need. In application centers in Europe, Asia and North America, system solutions are tested and optimized in accordance with customer specifications. All this makes us a reliable supplier and development partner.

Comprehensive services complete our offering: SICK LifeTime Services provide support throughout the machine life cycle and ensure safety and productivity.

For us, that is "Sensor Intelligence."

WORLDWIDE PRESENCE:

Contacts and other locations –www.sick.com

SICK
Sensor Intelligence.