Data sheet

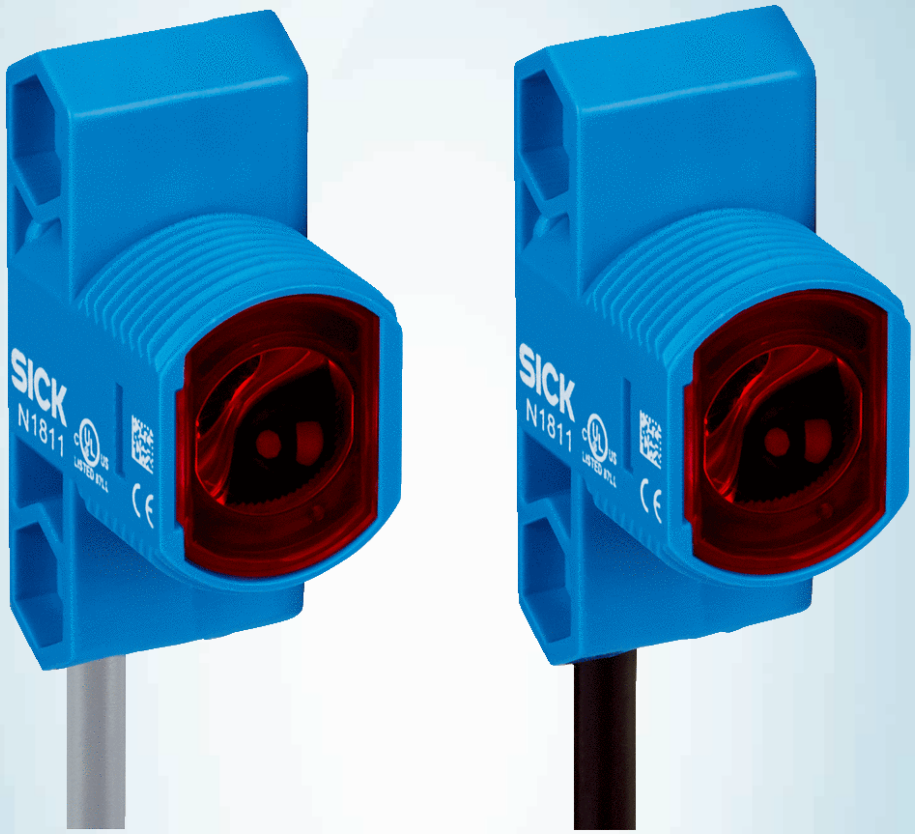

ZSE18-2AB5B8

Z18 Simple Sense

PHOTOELECTRIC SENSORS

SICK
Sensor Intelligence.

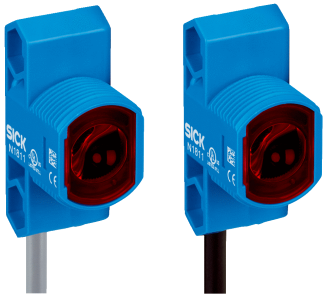

Illustration may differ

Ordering information

Type	part no.
ZSE18-2AB5B8	1095850

Included in delivery: BEF-MU-M18*1 (2)

Other models and accessories → www.sick.com/Z18_Simple_Sense

Detailed technical data

Features

Functional principle	Through-beam photoelectric sensor
Dimensions (W x H x D)	13.6 mm x 34.8 mm x 21.9 mm
Housing design (light emission)	Hybrid
Thread diameter (housing)	M18
Mounting system type	M18, head/side (24.1 ... 25.4 mm)
Housing color	Blue
Sensing range max.	0 m ... 22 m
Sensing range	0 m ... 20 m
Type of light	Visible red light
Light source	LED
Light spot size (distance)	Ø 125 mm (1,000 mm)
Wave length	625 nm

Mechanics/electronics

Supply voltage U_B	10 V DC ... 30 V DC
Ripple	< 10 %
Current consumption	≤ 15 mA [1]
Switching output	Push-pull: PNP/NPN
Switching mode	Light switching, Dark switching
Switching output detail	
Switching output Q1	Push-pull: PNP/NPN, Light switching

[1] Without load.
[2] Signal transit time with resistive load.
[3] With light/dark ratio 1:1.
[4] A = V_S connections reverse-polarity protected.
[5] B = inputs and output reverse-polarity protected.
[6] D = outputs overcurrent and short-circuit protected.

Switching output Q2	Push-pull: PNP/NPN, Dark switching
Output current $I_{max.}$	100 mA
Response time	≤ 500 µs [2]
Switching frequency	1,000 kHz [3]
Connection type	Cable with male connector M8, 4-pin, snap, 150 mm
Cable material	Plastic, PVC
Conductor cross section	0.13 mm²
Circuit protection	A [4] B [5] D [6]
Protection class	III
Weight	4.54 g
Housing material	Plastic, ABS
Optics material	Plastic, PMMA
Enclosure rating	IP67
Ambient operating temperature	–40 °C ... +55 °C
Ambient temperature, storage	–40 °C ... +70 °C
UL File No.	E189383

[1] Without load.
[2] Signal transit time with resistive load.
[3] With light/dark ratio 1:1.
[4] A = V_S connections reverse-polarity protected.
[5] B = inputs and output reverse-polarity protected.
[6] D = outputs overcurrent and short-circuit protected.

Connection type/pinouts

Connection type	
	Cable with male connector M8, 4-pin, snap, 150 mm
Connection type Detail	
Cable material	Plastic
Conductor cross section	0.13 mm²
Pinouts $_{Sender}$	
BN 1	+ (L+)
WH 2	Not connected
BU 3	- (M)
BK 4	Test $_{IN}$
Pinouts $_{Receiver}$	
BN 1	+ (L+)
WH 2	Q_2
BU 3	- (M)
BK 4	Q_1

Certificates

EU declaration of conformity	✓

UK declaration of conformity	✓
ACMA declaration of conformity	✓
Moroccan declaration of conformity	✓
China RoHS	✓

Classifications

ECLASS 5.0	27270901
ECLASS 5.1.4	27270901
ECLASS 6.0	27270901
ECLASS 6.2	27270901
ECLASS 7.0	27270901
ECLASS 8.0	27270901
ECLASS 8.1	27270901
ECLASS 9.0	27270901
ECLASS 10.0	27270901
ECLASS 11.0	27270901
ECLASS 12.0	27270901
ETIM 5.0	EC002716
ETIM 6.0	EC002716
ETIM 7.0	EC002716
ETIM 8.0	EC002716
UNSPSC 16.0901	39121528

Dimensional drawing

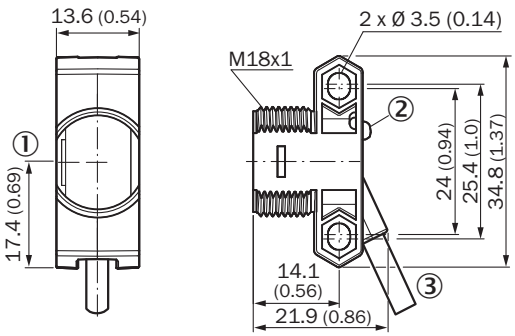

Dimensions in mm (inch)
① Optical axis
② LED status indicator
③ Connection

Pinouts, see table Technical data: Connection type/pinouts

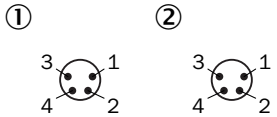

① sender
② receiver

Characteristic curve

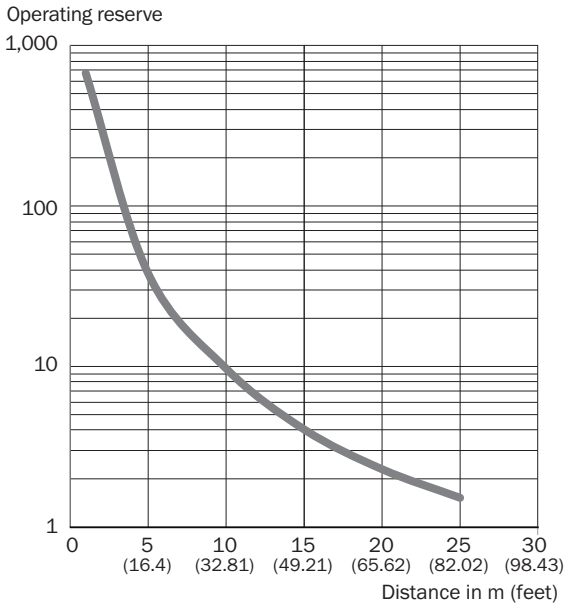

Light spot size

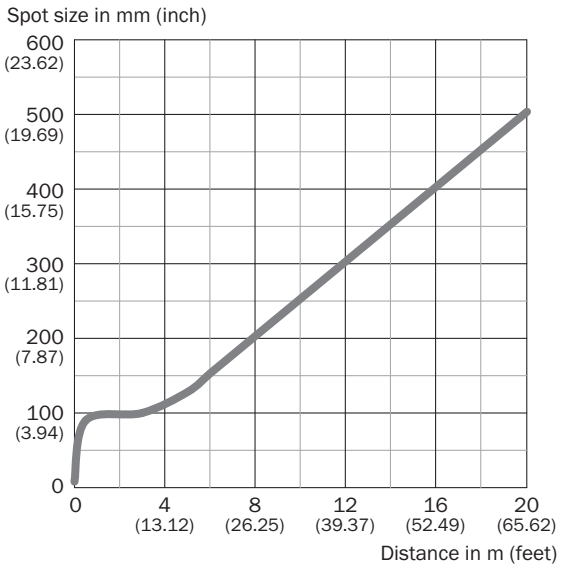

Recommended accessories

Other models and accessories ➜ www.sick.com/Z18_Simple_Sense

	Brief description	Type	part no.
Mounting systems			
	• **Description:** Mounting bracket for M18 sensors • **Material:** Steel • **Details:** Steel, zinc coated • **Items supplied:** Without mounting hardware • **Suitable for:** GR18, V180-2, V18, W15, Z1, Z2	BEF-WN-M18	5308446
	• **Description:** Plate N11N for universal clamp bracket • **Material:** Stainless steel • **Details:** Stainless steel 1.4571 (sheet), Stainless steel 1.4408 (clamp) • **Items supplied:** Universal clamp (5322627), mounting hardware • **Usable for:** DeltaPac, Glare, WTD20E	BEF-KHS-N11N	2071081
connectors and cables			
	• **Connection type head A:** Female connector, M8, 4-pin, straight, A-coded • **Connection type head B:** Flying leads • **Signal type:** Sensor/actuator cable • **Cable:** 5 m, 4-wire, PVC • **Description:** Sensor/actuator cable, unshielded • **Application:** Uncontaminated zones, Zones with chemicals	YF8U14-050VA3XLEAX	2095889
	• **Description:** Unshielded • **Connection type head A:** Male connector, M8, 4-pin, straight, A-coded • **Connection systems:** Screw-type terminals • **Permitted cross-section:** 0.14 mm² ... 0.5 mm²	STE-0804-G	6037323
	• **Connection type head A:** Female connector, M8, 4-pin, straight, A-coded • **Connection type head B:** Flying leads • **Signal type:** Sensor/actuator cable • **Cable:** 5 m, 4-wire, PUR, halogen-free • **Description:** Sensor/actuator cable, unshielded • **Application:** Drag chain operation, Zones with oils and lubricants, Robot, Drag chain operation	YF8U14-050UA3XLEAX	2094792

SICK AT A GLANCE

SICK is one of the leading manufacturers of intelligent sensors and sensor solutions for industrial applications. A unique range of products and services creates the perfect basis for controlling processes securely and efficiently, protecting individuals from accidents and preventing damage to the environment.

We have extensive experience in a wide range of industries and understand their processes and requirements. With intelligent sensors, we can deliver exactly what our customers need. In application centers in Europe, Asia and North America, system solutions are tested and optimized in accordance with customer specifications. All this makes us a reliable supplier and development partner.

Comprehensive services complete our offering: SICK LifeTime Services provide support throughout the machine life cycle and ensure safety and productivity.

For us, that is "Sensor Intelligence."

WORLDWIDE PRESENCE:

Contacts and other locations –www.sick.com

SICK
Sensor Intelligence.