Data sheet

WS/WE14-2N130

W14

PHOTOELECTRIC SENSORS

SICK
Sensor Intelligence.

Illustration may differ

Ordering information

Type	part no.
WS/WE14-2N130	1075287

Other models and accessories → www.sick.com/W14

Detailed technical data

Features

Functional principle	Through-beam photoelectric sensor
Dimensions (W x H x D)	17.6 mm x 75.5 mm x 33.5 mm
Housing design (light emission)	Rectangular
Sensing range max.	0 m ... 15 m
Sensing range	0 m ... 10 m
Type of light	Visible red light
Light source	LED [1]
Light spot size (distance)	Ø 300 mm (10 m)
Wave length	645 nm
Adjustment	None

[1] Average service life: 100,000 h at T_U = +25 °C.

Mechanics/electronics

Supply voltage	10 V DC ... 30 V DC [1]
Power consumption, sender	35 mA [2]
Power consumption, receiver	25 mA [2]
Switching output	NPN
Output function	Complementary
Switching mode	Light/dark switching
Output current $I_{max.}$	≤ 100 mA

[1] Limit values when operated in short-circuit protected network: max. 8 A.
[2] Without load.
[3] Signal transit time with resistive load.
[4] With light/dark ratio 1:1.
[5] Do not bend below 0 °C.
[6] A = V_S connections reverse-polarity protected.
[7] C = interference suppression.
[8] D = outputs overcurrent and short-circuit protected.

Response time	≤ 2.5 ms [3]
Switching frequency	200 Hz [4]
Connection type	Cable, 4-wire, 2 m [5]
Cable material	PVC
Circuit protection	A [6] C [7] D [8]
Weight	120 g
Housing material	Plastic, ABS
Optics material	Plastic, PMMA
Enclosure rating	IP67
Ambient operating temperature	–25 °C ... +60 °C
Ambient temperature, storage	–40 °C ... +70 °C
UL File No.	NRKH.E181493 & NRKH7.E181493
Part number of individual components	2030964 WS14-2D130 2030967 WE14-2N130

[1] Limit values when operated in short-circuit protected network: max. 8 A.
[2] Without load.
[3] Signal transit time with resistive load.
[4] With light/dark ratio 1:1.
[5] Do not bend below 0 °C.
[6] A = V_S connections reverse-polarity protected.
[7] C = interference suppression.
[8] D = outputs overcurrent and short-circuit protected.

Safety-related parameters

$MTTF_D$	1,000 years
DC_{avg}	0 %

Classifications

ECLASS 5.0	27270901
ECLASS 5.1.4	27270901
ECLASS 6.0	27270901
ECLASS 6.2	27270901
ECLASS 7.0	27270901
ECLASS 8.0	27270901
ECLASS 8.1	27270901
ECLASS 9.0	27270901
ECLASS 10.0	27270901
ECLASS 11.0	27270901
ECLASS 12.0	27270901
ETIM 5.0	EC002716
ETIM 6.0	EC002716
ETIM 7.0	EC002716
ETIM 8.0	EC002716
UNSPSC 16.0901	39121528

Connection type

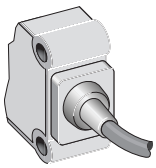

Connection diagram Cd-074

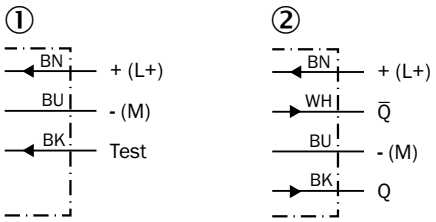

① sender
② receiver

Characteristic curve WS/WE14-2

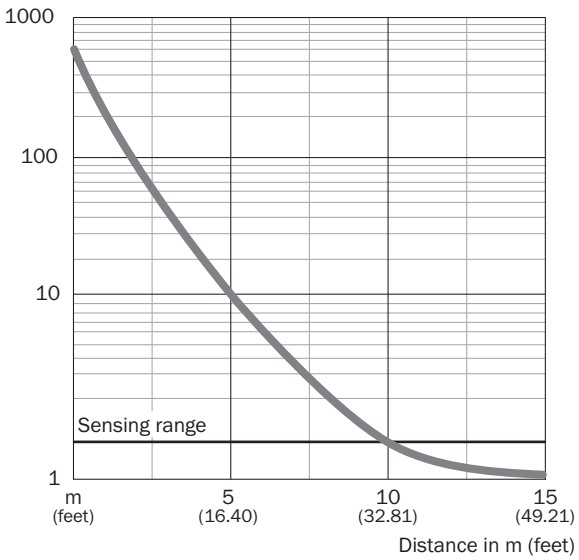

Sensing range diagram WS/WE14-2

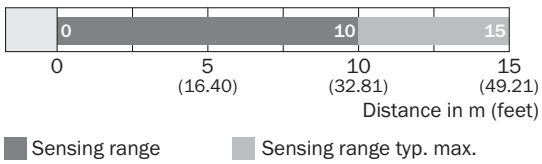

Dimensional drawing WS/WE14-2

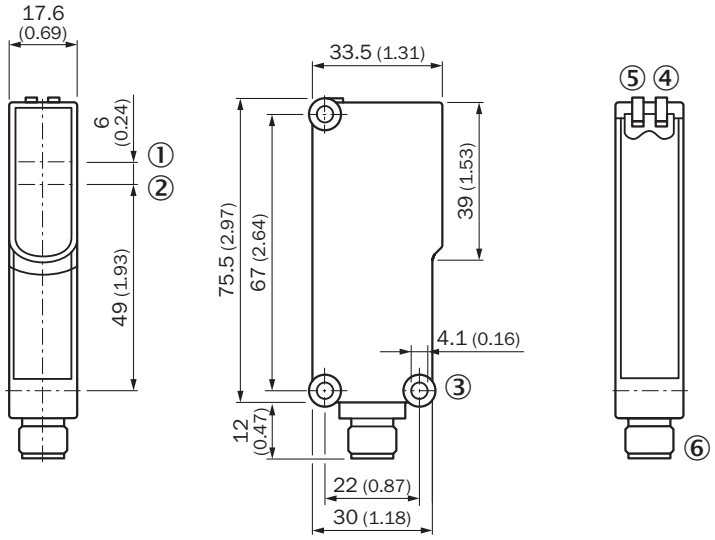

Dimensions in mm (inch)
① Optical axis, sender
② Optical axis, receiver
③ Mounting hole ø 4.1 mm
④ LED indicator yellow: Status of received light beam
⑤ LED indicator green: Supply voltage active
⑥ M12 male connector, 4-pin or 2 m cable

Recommended accessories

Other models and accessories ➜ www.sick.com/W14

	Brief description	Type	part no.
Mounting systems			
	• **Description:** Mounting bracket • **Material:** Steel • **Details:** Steel, zinc coated • **Items supplied:** Mounting hardware included • **Suitable for:** W14-2, W18-3	BEF-WN-W14	2019084
	• **Description:** Mounting bracket with hinged arm • **Material:** Steel • **Details:** Steel, zinc coated • **Items supplied:** Mounting hardware included • **Suitable for:** W14-2, W18-3	BEF-WN-W18	2009317
	• **Description:** Plate N11N for universal clamp bracket • **Material:** Stainless steel • **Details:** Stainless steel 1.4571 (sheet), Stainless steel 1.4408 (clamp) • **Items supplied:** Universal clamp (5322627), mounting hardware • **Usable for:** DeltaPac, Glare, WTD20E	BEF-KHS-N11N	2071081
connectors and cables			
	• **Connection type head A:** Male connector, M12, 4-pin, straight, A-coded • **Description:** Unshielded • **Connection systems:** Screw-type terminals • **Permitted cross-section:** ≤ 0.75 mm²	STE-1204-G	6009932

SICK AT A GLANCE

SICK is one of the leading manufacturers of intelligent sensors and sensor solutions for industrial applications. A unique range of products and services creates the perfect basis for controlling processes securely and efficiently, protecting individuals from accidents and preventing damage to the environment.

We have extensive experience in a wide range of industries and understand their processes and requirements. With intelligent sensors, we can deliver exactly what our customers need. In application centers in Europe, Asia and North America, system solutions are tested and optimized in accordance with customer specifications. All this makes us a reliable supplier and development partner.

Comprehensive services complete our offering: SICK LifeTime Services provide support throughout the machine life cycle and ensure safety and productivity.

For us, that is "Sensor Intelligence."

WORLDWIDE PRESENCE:

Contacts and other locations –www.sick.com

SICK
Sensor Intelligence.