Data sheet

CLV642-0000

CLV64x

FIXED MOUNT BARCODE SCANNERS

SICK
Sensor Intelligence.

Ordering information

Type	part no.
CLV642-0000	1044873

Other models and accessories → www.sick.com/CLV64x

Detailed technical data

Features

Version	High Density
Connection type	Cable
Reading field	Front
Sensor type	Line scanner
Optical focus	Dynamic focus control
Light source	Light spot, laser, Visible, Red, 655 nm
Light spot	Circular
Laser class	2, complies with 21 CFR 1040.10 except for the conformance according to “Laser Notice No. 56” from May 8, 2019 (EN 60825-1:2014+A11:2021, IEC 60825-1:2014)
Aperture angle	≤ 50°
Reading distance	30 mm ... 345 mm [1]
Scanning frequency	400 Hz ... 1,200 Hz
Code resolution	0.15 mm ... 0.25 mm

[1] For details see reading field diagram.

Mechanics/electronics

Connection type	1 x 15-pin D-Sub HD male connector (0.9 m)
Supply voltage	18 V DC ... 30 V DC
Power consumption	5.5 W
Housing material	Aluminum die cast

[1] At 25 °C.

Housing color	Light blue (RAL 5012)
Window material	Glass
Enclosure rating	IP65 (EN 60529)
Protection class	III (EN 61140)
Weight	+ 320 g, with connecting cable
Dimensions (L x W x H)	61 mm x 96 mm x 38 mm
MTBF	100,000 h
MTTF	40,000 h (Laser diode) [1]

[1] At 25 °C.

Performance

Readable code structures	1D codes
Bar code types	All current code types, Code 39, Code 128, Code 93, Codabar, GS1-128 / EAN 128, UPC / GTIN / EAN, Interleaved 2 of 5, Pharmacode, GS1 DataBar, Telepen, MSI/Plessey
Code printing process	Label (printed codes)
Print ratio	2:1 ... 3:1
No. of codes per scan	1 ... 20 (Standard decoder) 1 ... 6 (SMART decoder)
No. of codes per reading interval	1 ... 50 (auto-discriminating)
No. of characters per reading interval	5,000 500 (for multiplexer function in CAN operation)
No. of multiple readings	1 ... 99

Interfaces

PROFINET	✓
Type of fieldbus integration	Optional over external fieldbus module CDF600-2
Function	PROFINET Single Port, PROFINET Dual Port
EtherCAT®	✓
Type of fieldbus integration	Optional over external fieldbus module CDF600
Serial	✓ , RS-232, RS-422, RS-485
Function	Data interface (read result output), Service interface
Data transmission rate	2,400 Baud ... 115.2 kBaud, AUX: 57.6 kBaud (RS-232)
CAN	✓
Function	SICK CAN sensor network CSN (CAN controller/CAN device, multiplexer/server)
Data transmission rate	20 kbit/s ... 1 Mbit/s
CANopen	✓
Data transmission rate	20 kbit/s ... 1 Mbit/s
PROFIBUS DP	✓
Type of fieldbus integration	Optional over external fieldbus module CDF600-2
Digital inputs	4 (“Sensor 1”, “Sensor 2”, 2 inputs via optional parameter storage CMC600 in CDB620/ CDM420)
Digital outputs	4 (“Result 1”, “Result 2”, 2 outputs via optional parameter storage CMC600 in CDB620/ CDM420)
Reading pulse	Digital inputs, non-powered, serial interface, auto pulse, CAN

Optical indicators	6 LEDs (Ready, Result, laser, Data, CAN, LNK TX, Bar graph for displaying the reading rate percentage (10 LEDs))
Acoustic indicators	Beeper/buzzer (can be switched off, can be allocated as a result indication function)
Control elements	2 buttons (choose and start/stop functions)
Configuration software	SOPAS ET
Memory card	MicroSD memory card (flash card), optional

Ambient data

Electromagnetic compatibility (EMC)	EN 61000-6-3 (2001-10) / EN 61000-6-2:2005
Vibration resistance	EN 60068-2-6 (1995)
Shock resistance	EN 60068-2-27 (1993)
Ambient operating temperature	0 °C ... +40 °C
Storage temperature	–20 °C ... +70 °C
Permissible relative humidity	90 %, Non-condensing
Ambient light immunity	2,000 lx, on barcode
Bar code print contrast (PCS)	≥ 60 %

General notes

Note on use	For Ethernet connection please use an Ethernet version of CLV6xx

Classifications

ECLASS 5.0	27280102
ECLASS 5.1.4	27280102
ECLASS 6.0	27280102
ECLASS 6.2	27280102
ECLASS 7.0	27280102
ECLASS 8.0	27280102
ECLASS 8.1	27280102
ECLASS 9.0	27280102
ECLASS 10.0	27280102
ECLASS 11.0	27280102
ECLASS 12.0	27280102
ETIM 5.0	EC002550
ETIM 6.0	EC002550
ETIM 7.0	EC002550
ETIM 8.0	EC002550
UNSPSC 16.0901	43211701

Certificates

EU declaration of conformity	✓
UK declaration of conformity	✓
ACMA declaration of conformity	✓
China RoHS	✓
cULus certificate	✓

Ethercat certificate	✓
Profinet certificate	✓
Laser safety (IEC 60825-1) declaration of manufacturer	✓
Information according to Art. 3 of Data Act (Regulation EU 2023/2854)	✓
4Dpro	✓

Dimensional drawing CLV63x/64x/65x Standard, front

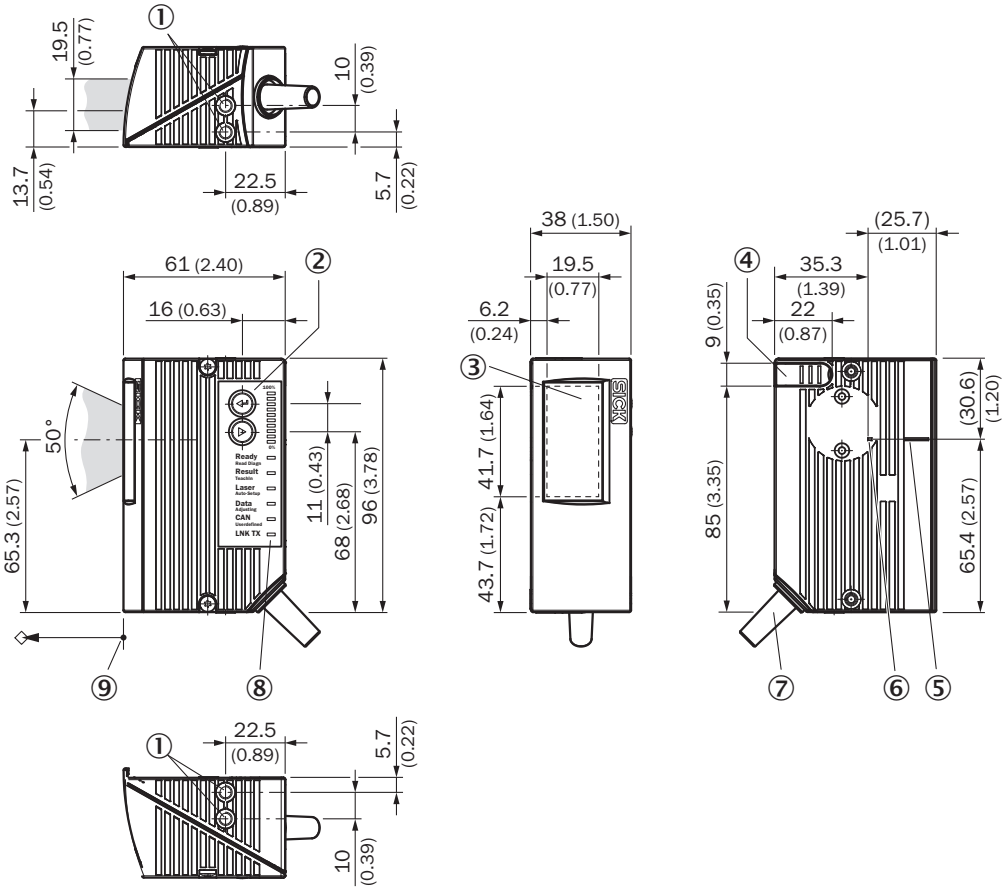

Dimensions in mm (inch)
① blind hole thread M5, 5 mm deep (2 x), for mounting
② Function button (2 x)
③ Reading field
④ cover for the microSD memory card
⑤ central position of the deflected laser beam in the V-shaped aperture angle
⑥ internal impact point: rotation point of the variable direction laser beam
⑦ Cable with 15-pin D-sub HD male connector
⑧ LED status indicator (6x) and bar graph
⑨ reference point for reading distance (from housing edge to object)

Reading field diagram

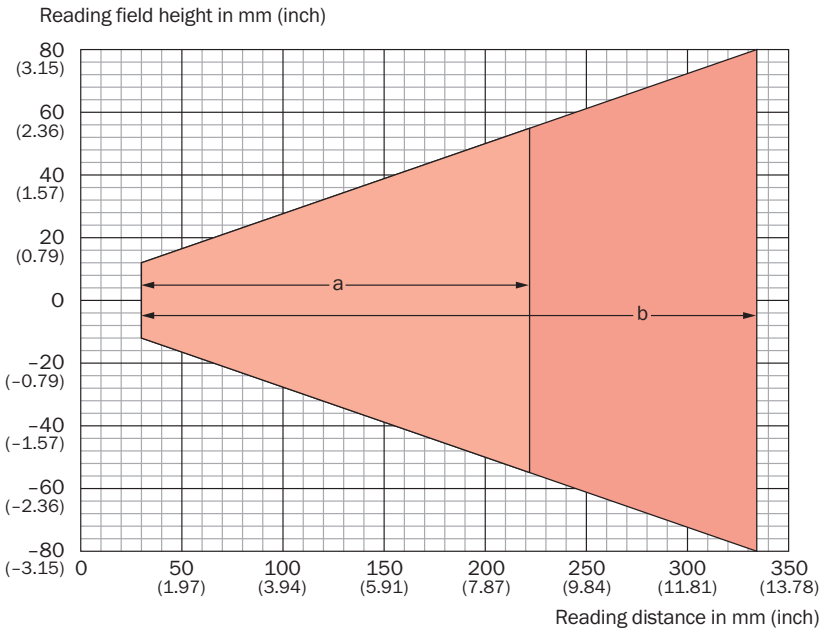

Resolution

a: 0.15 mm (5.9 mil) b: 0.20 mm (7.9 mil)

SICK AT A GLANCE

SICK is one of the leading manufacturers of intelligent sensors and sensor solutions for industrial applications. A unique range of products and services creates the perfect basis for controlling processes securely and efficiently, protecting individuals from accidents and preventing damage to the environment.

We have extensive experience in a wide range of industries and understand their processes and requirements. With intelligent sensors, we can deliver exactly what our customers need. In application centers in Europe, Asia and North America, system solutions are tested and optimized in accordance with customer specifications. All this makes us a reliable supplier and development partner.

Comprehensive services complete our offering: SICK LifeTime Services provide support throughout the machine life cycle and ensure safety and productivity.

For us, that is "Sensor Intelligence."

WORLDWIDE PRESENCE:

Contacts and other locations –www.sick.com

SICK
Sensor Intelligence.