Data sheet

WL4-3E3130

W4

PHOTOELECTRIC SENSORS

SICK
Sensor Intelligence.

Illustration may differ

Ordering information

Type	part no.
WL4-3E3130	1028157

Other models and accessories ➜ www.sick.com/W4

Detailed technical data

Features

Functional principle	Photoelectric retro-reflective sensor
Functional principle detail	With minimum distance to reflector (dual lens system)
Sensing range max.	0.01 m ... 4.5 m [1]
Sensing range	0.02 m ... 3.5 m [1]
Polarisation filters	Yes
Emitted beam	
Light source	PinPoint LED [2]
Type of light	Visible red light
Light spot size (distance)	Ø 75 mm (1.5 m)
Key LED figures	
Wave length	650 nm
Adjustment	None

[1] Reflector PL80A.
[2] Average service life: 100,000 h at T_U = +25 °C.

Electronics

Supply voltage U_B	10 V DC ... 30 V DC [1]
Ripple	< 5 V_{pp} [2]
Current consumption	20 mA [3]
Protection class	III

[1] Limit values.
[2] May not fall below or exceed U_V tolerances.
[3] Without load.
[4] Signal transit time with resistive load.
[5] With light/dark ratio 1:1.
[6] A = V_S connections reverse-polarity protected.
[7] C = interference suppression.
[8] D = outputs overcurrent and short-circuit protected.

Digital output	
Type	NPN
Switching mode	Dark switching
Output current $I_{max.}$	≤ 100 mA
Response time	< 0.5 ms [4]
Switching frequency	1,000 Hz [5]
Circuit protection	A [6] C [7] D [8]

[1] Limit values.
[2] May not fall below or exceed U_V tolerances.
[3] Without load.
[4] Signal transit time with resistive load.
[5] With light/dark ratio 1:1.
[6] A = V_S connections reverse-polarity protected.
[7] C = interference suppression.
[8] D = outputs overcurrent and short-circuit protected.

Mechanics

Housing	Rectangular
Design detail	Flat
Dimensions (W x H x D)	16 mm x 39.5 mm x 12 mm
Connection	Cable with connector M8, 3-pin [1]
Connection detail	
Conductor size	0.14 mm²
Cable diameter	Ø 3.4 mm
Length of cable (L)	100 mm [1]
Material	
Housing	Plastic, ABS
Front screen	Plastic, PMMA
Cable	Plastic, PVC
Weight	30 g

[1] Do not bend below 0 °C.

Ambient data

Enclosure rating	IP67 IP66
Ambient operating temperature	–40 °C ... +60 °C
Ambient temperature, storage	–40 °C ... +75 °C
UL File No.	NRKH.E181493 & NRKH7.E181493

Classifications

ECLASS 5.0	27270902
ECLASS 5.1.4	27270902
ECLASS 6.0	27270902
ECLASS 6.2	27270902

ECLASS 7.0	27270902
ECLASS 8.0	27270902
ECLASS 8.1	27270902
ECLASS 9.0	27270902
ECLASS 10.0	27270902
ECLASS 11.0	27270902
ECLASS 12.0	27270902
ETIM 5.0	EC002717
ETIM 6.0	EC002717
ETIM 7.0	EC002717
ETIM 8.0	EC002717
UNSPSC 16.0901	39121528

Connection type

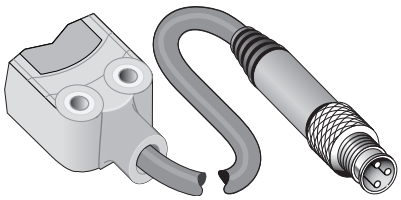

Connection diagram Cd-045

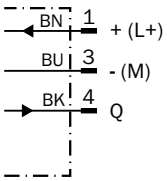

Characteristic curve WLG4-3 with polarisation filter

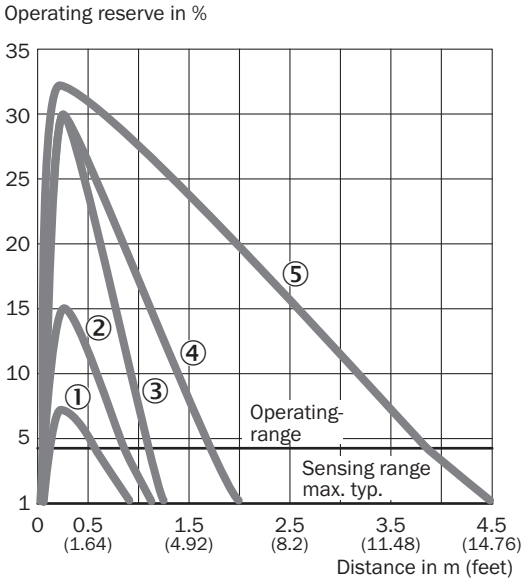

① Reflective tape REF-IRF-56
② PL10F reflector
③ Reflector PL20A
④ Reflector PL40A
⑤ Reflector PL80A

Sensing range diagram WLG4-3 with polarisation filter

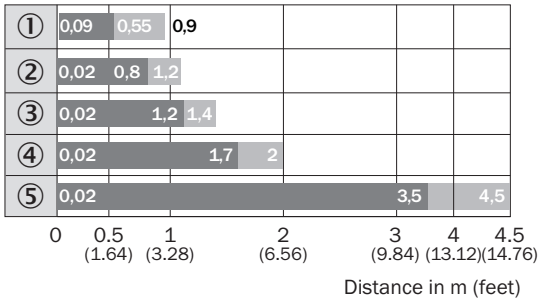

Sensing range Sensing range max.

① Reflective tape REF-IRF-56
② PL10F reflector
③ Reflector PL20A
④ Reflector PL40A
⑤ Reflector PL80A

Dimensional drawing WL4-3

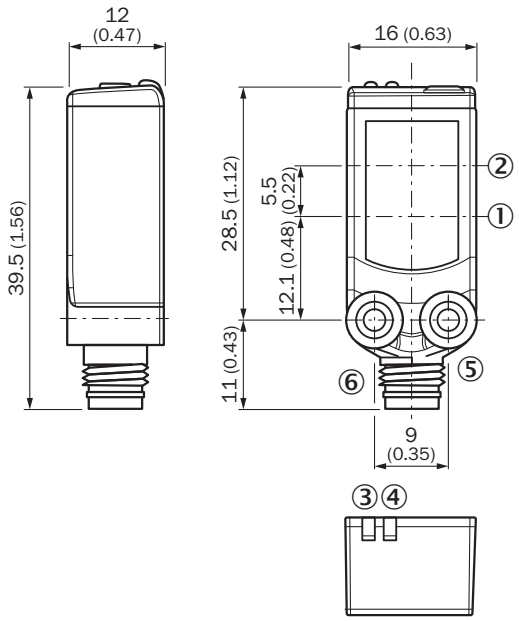

Dimensions in mm (inch)
① Center of optical axis, sender
② Center of optical axis, receiver
③ Orange LED indicator: status of received light beam
④ LED indicator green: Supply voltage active
⑤ Threaded mounting hole M3
⑥ Connection

Dimensional drawing WL4-3

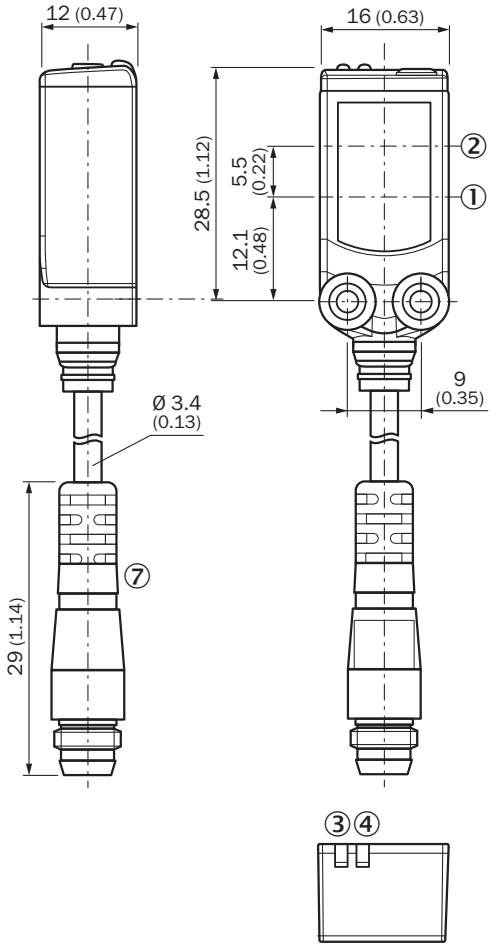

Dimensions in mm (inch)
① Center of optical axis, sender
② Center of optical axis, receiver
③ Orange LED indicator: status of received light beam
④ LED indicator green: Supply voltage active
⑦ Connection

Recommended accessories

Other models and accessories ➜ www.sick.com/W4

	Brief description	Type	part no.
Mounting systems			
	• **Description:** Plate N08 for universal clamp bracket • **Material:** Steel, zinc diecast • **Details:** Zinc plated steel (sheet), Zinc die cast (clamping bracket) • **Items supplied:** Universal clamp (5322626), mounting hardware • **Usable for:** W100, W150, W4S, W4F, W8, W9-3, W8G, W8 Laser, W8 Inox, G6, W100 Laser, W100-2, W10, G6 Inox, RAY10, W4SLG-3, W9, GR18, MultiPulse, Reflex Array, MultiLine, LUT3, KT5, KT8, KT10, CS8	BEF-KHS-N08	2051607
	• **Description:** Mounting bracket for wall mounting • **Material:** Stainless steel • **Details:** Stainless steel 1.4571 • **Items supplied:** Mounting hardware included • **Suitable for:** W4S, W4F, W4S	BEF-W4-A	2051628
	• **Description:** Mounting bracket for floor mounting • **Material:** Stainless steel • **Details:** Stainless steel 1.4571 • **Items supplied:** Mounting hardware included • **Suitable for:** W4S, W4F, W4S	BEF-W4-B	2051630
	• **Description:** Plate N11N for universal clamp bracket • **Material:** Stainless steel • **Details:** Stainless steel 1.4571 (sheet), Stainless steel 1.4408 (clamp) • **Items supplied:** Universal clamp (5322627), mounting hardware • **Usable for:** DeltaPac, Glare, WTD20E	BEF-KHS-N11N	2071081
reflectors and optics			
	• **Description:** Rectangular, screw connection • **Dimensions:** 40 mm 60 mm • **Ambient operating temperature:** –30 °C ... +65 °C	PL40A	1012720
connectors and cables			
	• **Connection type head A:** Male connector, M8, 3-pin, straight, A-coded • **Description:** Unshielded • **Connection systems:** Screw-type terminals • **Permitted cross-section:** 0.14 mm² ... 0.5 mm²	STE-0803-G	6037322
	• **Connection type head A:** Female connector, M8, 3-pin, straight, A-coded • **Connection type head B:** Flying leads • **Signal type:** Sensor/actuator cable • **Cable:** 5 m, 3-wire, PVC • **Description:** Sensor/actuator cable, unshielded • **Application:** Zones with chemicals, Uncontaminated zones	YF8U13-050VA1XLEAX	2095884
	• **Connection type head A:** Female connector, M8, 3-pin, straight, A-coded • **Connection type head B:** Flying leads • **Signal type:** Sensor/actuator cable • **Cable:** 5 m, 3-wire, PUR, halogen-free • **Description:** Sensor/actuator cable, unshielded • **Application:** Uncontaminated zones, Zones with oils and lubricants, Robot, Drag chain operation	YF8U13-050UA1XLEAX	2094788

SICK AT A GLANCE

SICK is one of the leading manufacturers of intelligent sensors and sensor solutions for industrial applications. A unique range of products and services creates the perfect basis for controlling processes securely and efficiently, protecting individuals from accidents and preventing damage to the environment.

We have extensive experience in a wide range of industries and understand their processes and requirements. With intelligent sensors, we can deliver exactly what our customers need. In application centers in Europe, Asia and North America, system solutions are tested and optimized in accordance with customer specifications. All this makes us a reliable supplier and development partner.

Comprehensive services complete our offering: SICK LifeTime Services provide support throughout the machine life cycle and ensure safety and productivity.

For us, that is "Sensor Intelligence."

WORLDWIDE PRESENCE:

Contacts and other locations –www.sick.com

SICK
Sensor Intelligence.