Data sheet

WL12L-2B530S02

W12

PHOTOELECTRIC SENSORS

SICK
Sensor Intelligence.

Illustration may differ

Ordering information

Type	part no.
WL12L-2B530S02	1018957

Other models and accessories ➜ www.sick.com/W12

Detailed technical data

Features

Functional principle	Photoelectric retro-reflective sensor
Functional principle detail	Without reflector minimum distance (autocollimation/coaxial optics)
Sensing range max.	0 m ... 36 m [1]
Sensing range	0 m ... 5 m [2]
Polarisation filter	Yes
Emitted beam	
Light source	Laser [3]
Type of light	Visible red light
Light spot size (distance)	Ø 0.8 mm (300 mm)
Key laser figures	
Normative reference	EN 60825-1:2014, IEC 60825-1:2007
Laser class	2 [4] [5]
Key LED figures	
Wave length	650 nm
Adjustment	Potentiometer
Special applications	Detecting small objects, Detection of objects moving at high speeds

[1] Reflector PL80A.
[2] Reflective tape Diamond Grade.
[3] Average service life: 50,000 h at T_U = +25 °C.
[4] Pulse length 4 µs, max. pulse power < 5,0 mW.
[5] Do not intentionally look into the laser beam. Never point the laser beam at people's eyes.

Electronics

Supply voltage U_B	10 V DC ... 30 V DC [1]
Ripple	< 5 V_{pp} [2]
Current consumption	55 mA [3]
Protection class	III
Digital output	
Type	PNP [4]
	NPN [5]
Switching mode	Light switching, Dark switching [4] [5]
Switching mode selector	Selectable via L/D control cable
Signal voltage PNP HIGH/LOW	Uv - < 2.9 V, Uv V / 0 V <= 1.5 V
Signal voltage NPN HIGH/LOW	Uv - < 2.9 V, Uv V / 0 V <= 1.5 V
Output current $I_{max.}$	≤ 100 mA
Response time	≤ 200 µs [6]
Switching frequency	2,500 Hz [7]
Circuit protection	A [8] C [9] D [10]

[1] Limit values when operated in short-circuit protected network: max. 8 A.
[2] May not fall below or exceed U_V tolerances.
[3] Without load.
[4] 0 V or not connected, light switching.
[5] Uv, dark switching.
[6] Signal transit time with resistive load.
[7] With light/dark ratio 1:1.
[8] A = V_S connections reverse-polarity protected.
[9] C = interference suppression.
[10] D = outputs overcurrent and short-circuit protected.

Mechanics

Housing	Rectangular
Dimensions (W x H x D)	15 mm x 49 mm x 41.5 mm
Connection	Plug, M12, 5-pin
Material	
Housing	Metal
Front screen	Plastic, PMMA
Weight	130 g

Ambient data

Enclosure rating	IP67 IP69K
Ambient operating temperature	–10 °C ... +50 °C
Ambient temperature, storage	–25 °C ... +75 °C
UL File No.	NRKH.E181493 & NRKH7.E181493

Certificates

EU declaration of conformity	✓
UK declaration of conformity	✓
ACMA declaration of conformity	✓
Moroccan declaration of conformity	✓
China RoHS	✓
cULus certificate	✓
Laser safety (IEC 60825-1) certificate	✓

Classifications

ECLASS 5.0	27270902
ECLASS 5.1.4	27270902
ECLASS 6.0	27270902
ECLASS 6.2	27270902
ECLASS 7.0	27270902
ECLASS 8.0	27270902
ECLASS 8.1	27270902
ECLASS 9.0	27270902
ECLASS 10.0	27270902
ECLASS 11.0	27270902
ECLASS 12.0	27270902
ETIM 5.0	EC002717
ETIM 6.0	EC002717
ETIM 7.0	EC002717
ETIM 8.0	EC002717
UNSPSC 16.0901	39121528

Dimensional drawing WL12L-2, WS/WE12L-2

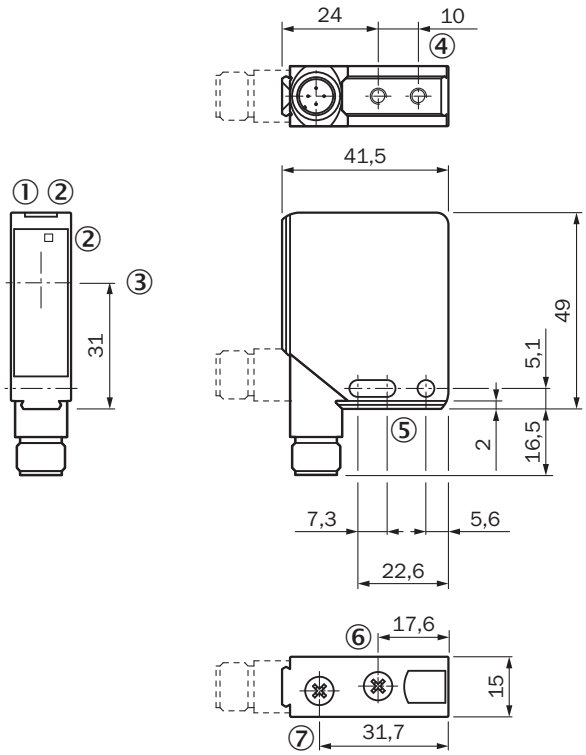

Dimensions in mm (inch)
① Operating indicator, green
② LED reception indicator, yellow
③ Center of optical axis
④ M4 threaded mounting hole – 4 mm depth
⑤ Mounting hole, Ø 4.2 mm
⑥ Focal adjustment
⑦ sensitivity control

Adjustments WL12L-2

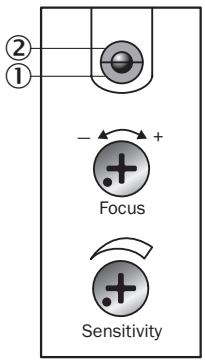

① Operating indicator, green
② LED reception indicator, yellow
⑥ Focal adjustment
⑦ sensitivity control

Connection type

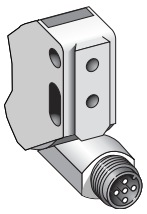

Connection diagram Cd-145

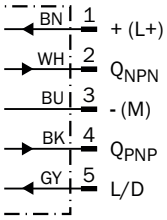

Recommended accessories

Other models and accessories ➜ www.sick.com/W12

	Brief description	Type	part no.
Mounting systems			
	• **Description:** Mounting bracket, large • **Material:** Stainless steel • **Details:** Stainless steel • **Items supplied:** Mounting hardware included • **Suitable for:** W11-2, W12-3, W16	BEF-WG-W12	2013942
	• **Description:** Universal mounting bracket for reflectors • **Dimensions (W x H x L):** 85 mm x 90 mm x 35 mm • **Material:** Steel • **Details:** Steel, zinc coated • **Suitable for:** C110A, P250, PL20, PL30A, PL40A, PL80A	BEF-WN-REFX	2064574
reflectors and optics			
	• **Description:** Rectangular, screw connection, width across flats 48 mm • **Ambient operating temperature:** –20 °C ... +65 °C	PL50A	1000132

	Brief description	Type	part no.
connectors and cables			
	• **Connection type head A:** Female connector, M12, 5-pin, angled, A-coded • **Connection type head B:** Flying leads • **Signal type:** Sensor/actuator cable • **Cable:** 2 m, 5-wire, PVC • **Description:** Sensor/actuator cable, unshielded • **Application:** Zones with chemicals, Uncontaminated zones	YG2A15-020VB5XLEAX	2096215
	• **Connection type head A:** Female connector, M12, 5-pin, angled, A-coded • **Connection type head B:** Flying leads • **Signal type:** Sensor/actuator cable • **Cable:** 0.6 m, 5-wire, PVC • **Description:** Sensor/actuator cable, unshielded • **Application:** Zones with chemicals, Uncontaminated zones	YG2A15-C60VB5XLEAX	2145573
	• **Connection type head A:** Female connector, M12, 5-pin, angled, A-coded • **Connection type head B:** Flying leads • **Signal type:** Sensor/actuator cable • **Cable:** 1 m, 5-wire, PVC • **Description:** Sensor/actuator cable, unshielded • **Application:** Zones with chemicals, Uncontaminated zones	YG2A15-010VB5XLEAX	2145574
	• **Connection type head A:** Female connector, M12, 5-pin, angled, A-coded • **Connection type head B:** Flying leads • **Signal type:** Sensor/actuator cable • **Cable:** 3 m, 5-wire, PVC • **Description:** Sensor/actuator cable, unshielded • **Application:** Zones with chemicals, Uncontaminated zones	YG2A15-030VB5XLEAX	2145575
	• **Connection type head A:** Male connector, M12, 5-pin, straight, A-coded • **Description:** Unshielded • **Connection systems:** Screw-type terminals • **Permitted cross-section:** ≤ 0.75 mm² • **Note:** For field bus technology	STE-1205-G	6022083
	• **Connection type head A:** Female connector, M12, 5-pin, straight, A-coded • **Connection type head B:** Flying leads • **Signal type:** Sensor/actuator cable • **Cable:** 5 m, 5-wire, PUR, halogen-free • **Description:** Sensor/actuator cable, unshielded • **Application:** Uncontaminated zones, Zones with oils and lubricants, Robot, Drag chain operation	YF2A15-050UB5XLEAX	2095618
	• **Connection type head A:** Female connector, M12, 5-pin, straight, A-coded • **Connection type head B:** Flying leads • **Signal type:** Sensor/actuator cable • **Cable:** 5 m, 5-wire, PVC • **Description:** Sensor/actuator cable, unshielded • **Application:** Zones with chemicals, Uncontaminated zones	YF2A15-050VB5XLEAX	2096240

SICK AT A GLANCE

SICK is one of the leading manufacturers of intelligent sensors and sensor solutions for industrial applications. A unique range of products and services creates the perfect basis for controlling processes securely and efficiently, protecting individuals from accidents and preventing damage to the environment.

We have extensive experience in a wide range of industries and understand their processes and requirements. With intelligent sensors, we can deliver exactly what our customers need. In application centers in Europe, Asia and North America, system solutions are tested and optimized in accordance with customer specifications. All this makes us a reliable supplier and development partner.

Comprehensive services complete our offering: SICK LifeTime Services provide support throughout the machine life cycle and ensure safety and productivity.

For us, that is "Sensor Intelligence."

WORLDWIDE PRESENCE:

Contacts and other locations –www.sick.com

SICK
Sensor Intelligence.