Data sheet

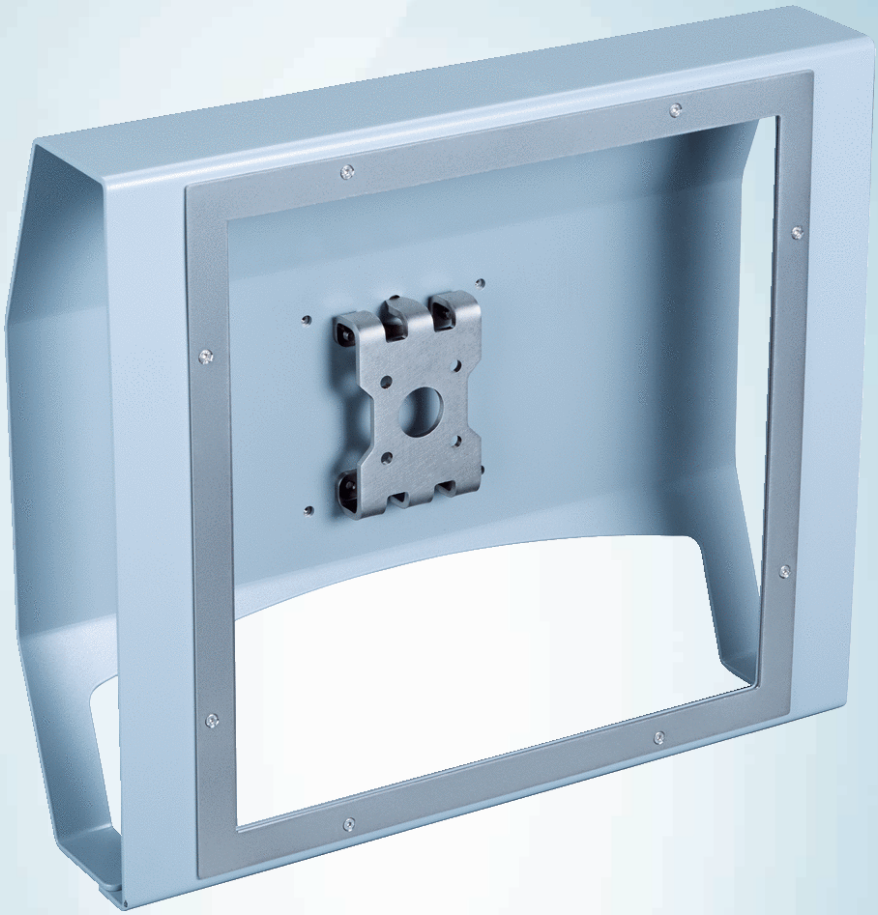

Weatherproof housing

Protective housing

DEVICE PROTECTION AND CARE

SICK
Sensor Intelligence.

Ordering information

Type	part no.
Weatherproof housing	2081800

Other models and accessories ➜ www.sick.com/Protective_housing

Detailed technical data

Features

Product segment	Device protection and care
Product	Protective housing
Description	Recommended for outdoor usage.
Material	Stainless steel

Classifications

ECLASS 5.0	27279202
ECLASS 5.1.4	27279202
ECLASS 6.0	27279202
ECLASS 6.2	27279202
ECLASS 7.0	27279202
ECLASS 8.0	27279202
ECLASS 8.1	27279202
ECLASS 9.0	27273701
ECLASS 10.0	27273701
ECLASS 11.0	27273701
ECLASS 12.0	27273701
ETIM 5.0	EC000200
ETIM 6.0	EC000200
ETIM 7.0	EC000200
ETIM 8.0	EC000200
UNSPSC 16.0901	32131023

Dimensional drawing

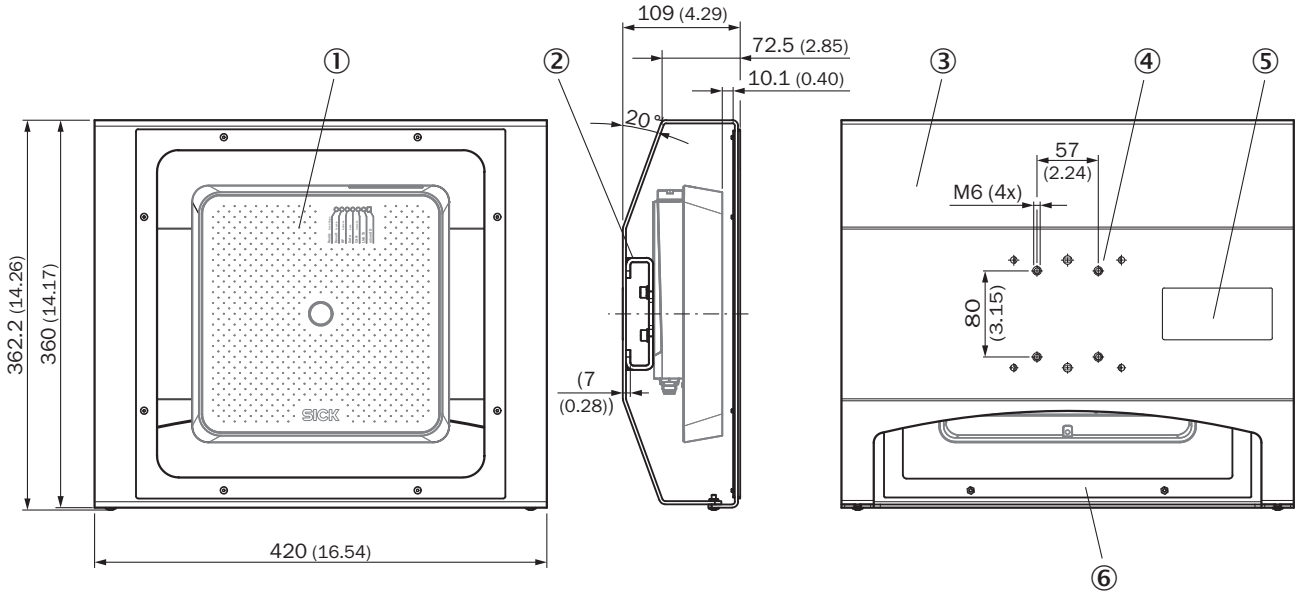

Dimensions in mm (inch)
① RFID read/write device (UHF)
② spacer
③ hood part of weather hood
④ Fixing holes for spacers with device on optional mounting accessory
⑤ Front screen
⑥ Frame part of weather hood

SICK AT A GLANCE

SICK is one of the leading manufacturers of intelligent sensors and sensor solutions for industrial applications. A unique range of products and services creates the perfect basis for controlling processes securely and efficiently, protecting individuals from accidents and preventing damage to the environment.

We have extensive experience in a wide range of industries and understand their processes and requirements. With intelligent sensors, we can deliver exactly what our customers need. In application centers in Europe, Asia and North America, system solutions are tested and optimized in accordance with customer specifications. All this makes us a reliable supplier and development partner.

Comprehensive services complete our offering: SICK LifeTime Services provide support throughout the machine life cycle and ensure safety and productivity.

For us, that is "Sensor Intelligence."

WORLDWIDE PRESENCE:

Contacts and other locations –www.sick.com

SICK
Sensor Intelligence.