Data sheet

KTM-LP55181P

KTM

CONTRAST SENSORS

SICK
Sensor Intelligence.

Illustration may differ

Ordering information

Type	part no.
KTM-LP55181P	1109749

Other models and accessories ➜ www.sick.com/KTM

Detailed technical data

Features

Housing design	Small
Dimensions (W x H x D)	12 mm x 31.5 mm x 21 mm
Light source	Laser, visible red light [1]
Light emission	Long side of housing
Light spot size	Ø 1.8 mm (250 mm)
Light spot direction	Round
Receiving filters	None
Wave length	680 nm
Laser class	I [2]
Sensing distance	≤ 250 mm
Sensing distance tolerance	± 30 mm
Max. web speed	10 m/s [3]
Display	LED indicator green: power on LED indicator, yellow: Status switching output Q
Adjustment	Teach-in button
Teach-in mode	2-point teach-in static/dynamic + proximity to mark ET: Teach-in dynamic

[1] Average service life: 100,000 h at T_U = +25 °C.
[2] Do not intentionally look into the laser beam. Never point the laser beam at people's eyes.
[3] At mark size = 1.5 mm.

Electronics

Supply voltage	10 V DC ... 30 V DC
Ripple	≤ 5 V_{pp} [1]
Current consumption	< 35 mA [2]
Switching frequency	1.5 kHz [3]
Response time	333 µs
Jitter	122 µs
Accuracy	0.15 mm
Switching output	PNP
Switching output (voltage)	PNP: HIGH = U_V ≤ 2 V / LOW approx. 0 V
Switching mode	Light/dark switching
Output current $I_{max.}$	100 mA [4]
Input, dynamic teach-in (ET)	PNP: Teach: U = 10,8 V ... < U_V PNP: Run: U < 2 V or open
Retention time (ET)	250 ms
Time delay	None
Protection class	III
Circuit protection	U_V connections, reverse polarity protected Output Q short-circuit protected Interference pulse suppression
Connection type	
	Male connector M8, 4-pin

[1] May not fall below or exceed U_V tolerances.
[2] Without load.
[3] With light/dark ratio 1:1.
[4] At supply voltage > 24 V, I_{max} = 50 mA. I_{max} is consumption count of all Q_n.

Mechanics

Housing material	ABS
Optics material	PMMA
Weight	Approx. 11 g

Ambient data

Ambient operating temperature	–20 °C ... +50 °C
Ambient temperature, storage	–40 °C ... +70 °C
Shock load	According to IEC 60068
Enclosure rating	IP67
UL File No.	E181493

Connection type/pinouts

Connection type	
	Male connector M8, 4-pin
Pinouts	
BN 1	+ (L+)
WH 2	ET

BU 3	- (M)
BK 4	Q

Classifications

ECLASS 5.0	27270906
ECLASS 5.1.4	27270906
ECLASS 6.0	27270906
ECLASS 6.2	27270906
ECLASS 7.0	27270906
ECLASS 8.0	27270906
ECLASS 8.1	27270906
ECLASS 9.0	27270906
ECLASS 10.0	27270906
ECLASS 11.0	27270906
ECLASS 12.0	27270906
ETIM 5.0	EC001820
ETIM 6.0	EC001820
ETIM 7.0	EC001820
ETIM 8.0	EC001820
UNSPSC 16.0901	39121528

Certificates

EU declaration of conformity	✓
UK declaration of conformity	✓
ACMA declaration of conformity	✓
Moroccan declaration of conformity	✓
China RoHS	✓
cULus certificate	✓

Dimensional drawing KTM-Lxxxxx1P

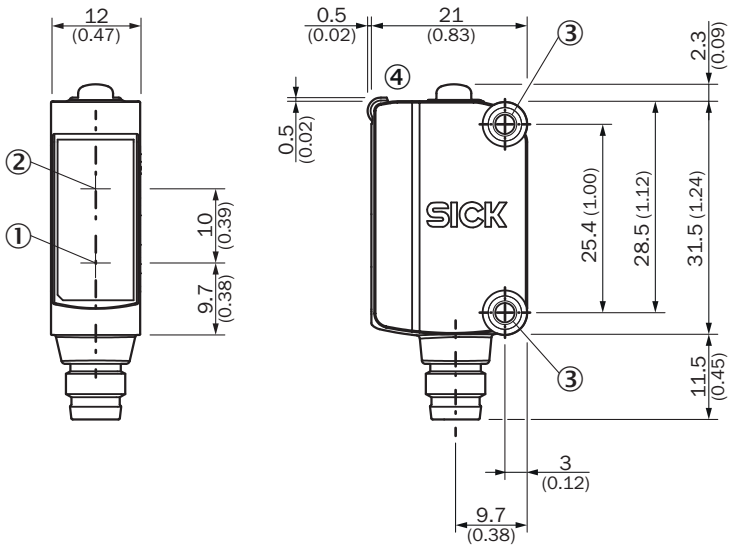

Dimensions in mm (inch)
① Center of optical axis, sender
② Center of optical axis, receiver
③ Mounting holes M3
④ display and adjustment elements

Pinouts, see table Technical data: Connection type/pinouts

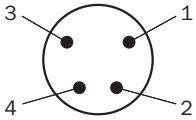

Male connector, M8, 4-pin, uncoded

display and adjustment elements

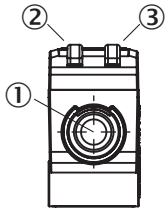

① Teach-in button
② LED yellow
③ LED green

Sensing distance

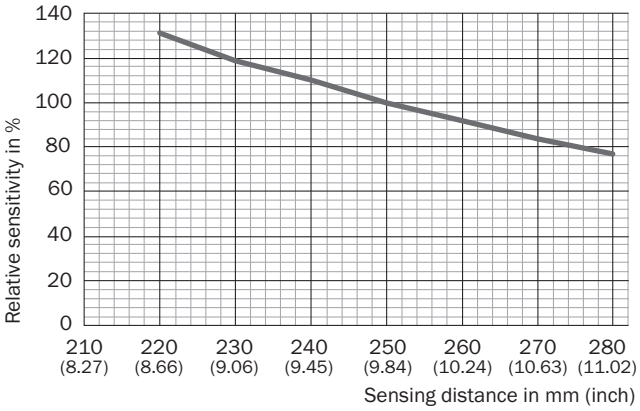

Light spot size KTM-Lxx5xxxx

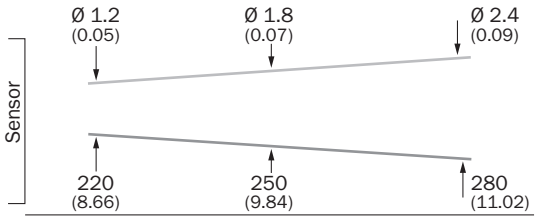

Recommended accessories

Other models and accessories ➜ www.sick.com/KTM

	Brief description	Type	part no.
connectors and cables			
	• **Connection type head A:** Female connector, M8, 4-pin, straight, A-coded • **Connection type head B:** Male connector, M12, 4-pin, straight, A-coded • **Signal type:** Sensor/actuator cable • **Cable:** 5 m, 4-wire, PVC • **Description:** Sensor/actuator cable, unshielded • **Application:** Uncontaminated zones, Zones with chemicals	YF8U14-050VA3M2A14	2096609
	• **Connection type head A:** Female connector, M8, 4-pin, straight, A-coded • **Connection type head B:** Flying leads • **Signal type:** Sensor/actuator cable • **Cable:** 5 m, 4-wire, PVC • **Description:** Sensor/actuator cable, unshielded • **Application:** Uncontaminated zones, Zones with chemicals	YF8U14-050VA3XLEAX	2095889

SICK AT A GLANCE

SICK is one of the leading manufacturers of intelligent sensors and sensor solutions for industrial applications. A unique range of products and services creates the perfect basis for controlling processes securely and efficiently, protecting individuals from accidents and preventing damage to the environment.

We have extensive experience in a wide range of industries and understand their processes and requirements. With intelligent sensors, we can deliver exactly what our customers need. In application centers in Europe, Asia and North America, system solutions are tested and optimized in accordance with customer specifications. All this makes us a reliable supplier and development partner.

Comprehensive services complete our offering: SICK LifeTime Services provide support throughout the machine life cycle and ensure safety and productivity.

For us, that is "Sensor Intelligence."

WORLDWIDE PRESENCE:

Contacts and other locations –www.sick.com

SICK
Sensor Intelligence.