Data sheet

C40S-1303DA040

C4000 Advanced

SAFETY LIGHT CURTAINS

SICK
Sensor Intelligence.

Illustration may differ

Ordering information

Type	part no.
C40S-1303DA040	1029015

Other models and accessories → www.sick.com/C4000_Advanced

Detailed technical data

Features

Application	Normal industrial environment
System part	Sender
Resolution	30 mm
Scanning range	21 m
Protective field height	1,350 mm
Synchronization	Optical synchronization

Safety-related parameters

Type	Type 4 (IEC 61496-1)
Safety integrity level	SIL 3 (IEC 61508)
Category	Category 4 (EN ISO 13849)
Performance level	PL e (EN ISO 13849)
PFH_D (mean probability of a dangerous failure per hour)	$15 * 10^{-9}$ (EN ISO 13849) $43 * 10^{-9}$ (EN ISO 13849) $63 * 10^{-9}$ (EN ISO 13849)
T_M (mission time)	20 years (EN ISO 13849)
Safe state in the event of a fault	At least one OSSD is in the OFF state.

Functions

	Functions	Delivery status
Protective operation	✓	
Restart interlock	✓	
External device monitoring (EDM)	✓	Deactivated
Beam coding	✓	Uncoded

Configurable scanning range	✓	0 m ... 6 m
Fixed blanking	✓	Deactivated
Floating blanking	✓	Deactivated
Safe SICK device communication via EFI	✓	

Functions in combination with UE402

Bypass	✓
Operating mode switching	✓
PSDI mode	✓

Interfaces

System connection	
Direction of cable connection	Straight
Conductor cross section	0.75 mm²
Permitted cable length	50 m [1]
Extension connection	Female connector M12, 8-pin
Display elements	7-segment display

[1] Depending on load, power supply and wire cross-section. The technical specifications must be observed.

Electronics

Protection class	III (IEC 61140)
Supply voltage V_S	24 V DC (19.2 V ... 28.8 V) [1]
Residual ripple	≤ 10 % [2]

[1] The external voltage supply must be capable of buffering brief mains voltage failures of 20 ms as specified in EN 60204-1. Suitable power supplies are available as accessories from SICK.
[2] Within the limits of V_S.

Mechanics

Dimensions	See dimensional drawing
Housing cross-section	48 mm x 40 mm
Housing material	Aluminum extruded profile
Weight	2,820 g

Ambient data

Enclosure rating	IP65 (EN 60529)
Ambient operating temperature	0 °C ... +55 °C
Storage temperature	–25 °C ... +70 °C
Air humidity	15 % ... 95 %, Non-condensing
Vibration resistance	5 g, 10 Hz ... 55 Hz (EN 60068-2-6)
Shock resistance	10 g, 16 ms (EN 60068-2-27)

Other information

Wave length	850 nm

Certificates

EU declaration of conformity	✓
UK declaration of conformity	✓

ACMA declaration of conformity	✓
Moroccan declaration of conformity	✓
China RoHS	✓
ULus approval	✓
cUL approval	✓
Taiwan OSHA certificate	✓
EC-Type-Examination approval	✓
China GB certificate	✓
Information according to Art. 3 of Data Act (Regulation EU 2023/2854)	✓

Classifications

ECLASS 5.0	27272704
ECLASS 5.1.4	27272704
ECLASS 6.0	27272704
ECLASS 6.2	27272704
ECLASS 7.0	27272704
ECLASS 8.0	27272704
ECLASS 8.1	27272704
ECLASS 9.0	27272704
ECLASS 10.0	27272704
ECLASS 11.0	27272704
ECLASS 12.0	27272704
ETIM 5.0	EC002549
ETIM 6.0	EC002549
ETIM 7.0	EC002549
ETIM 8.0	EC002549
UNSPSC 16.0901	46171620

Dimensional drawing

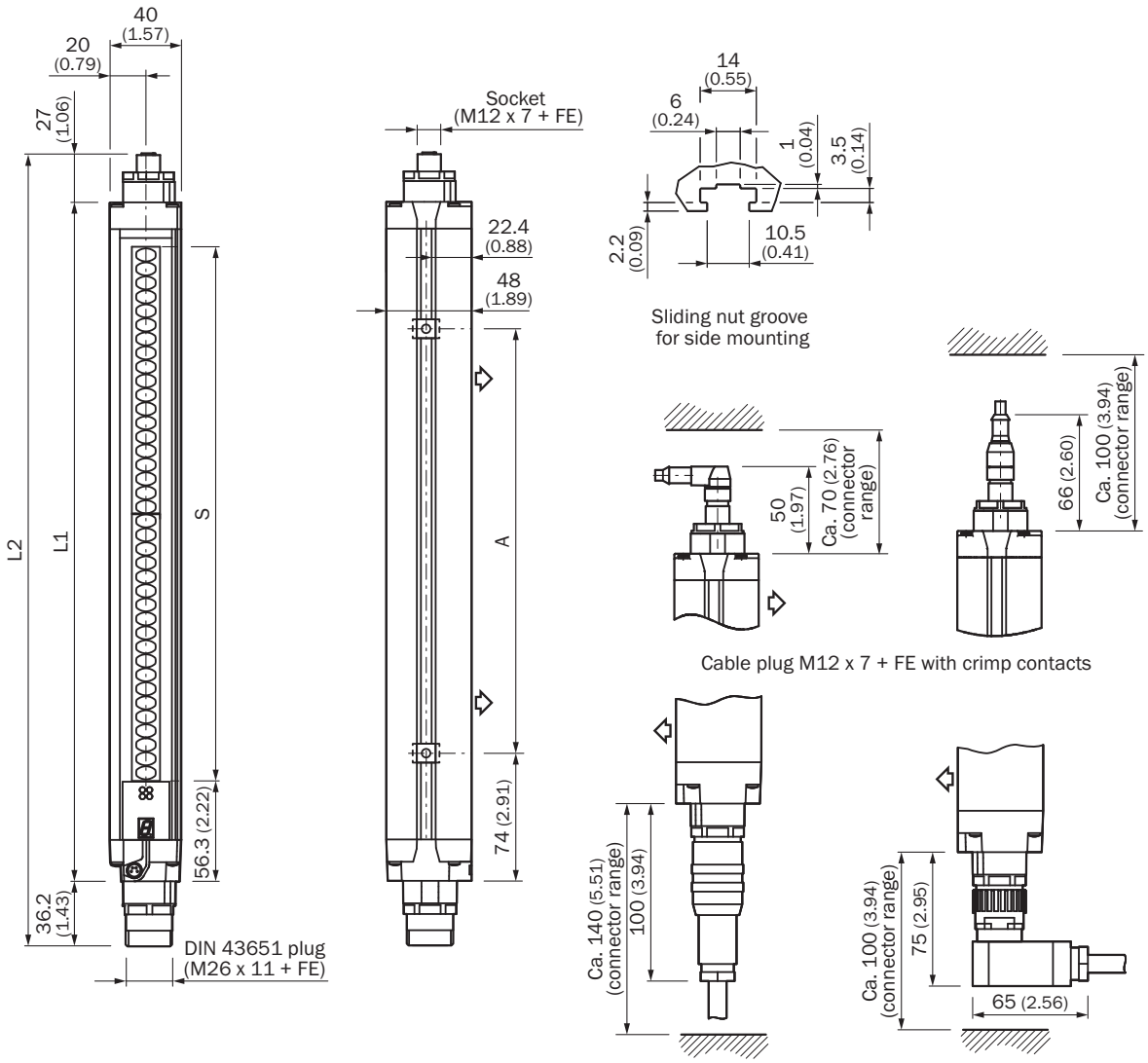

Dimensions in mm (inch)
illustration sender (receiver mirror image)

Protective field height S	L1	L2	A
300	381	444	224
450	532	594	374
600	682	744	524
750	833	895	674
900	984	1.046	824
1.050	1.134	1.196	974
1.200	1.283	1.346	1.124
1.350	1.435	1.497	1.274
1.500	1.586	1.649	1.424
1.650	1.736	1.798	1.574
1.800	1.887	1.949	1.724

Connection diagram C4000 safety light curtain to UE10-3OS safety relay

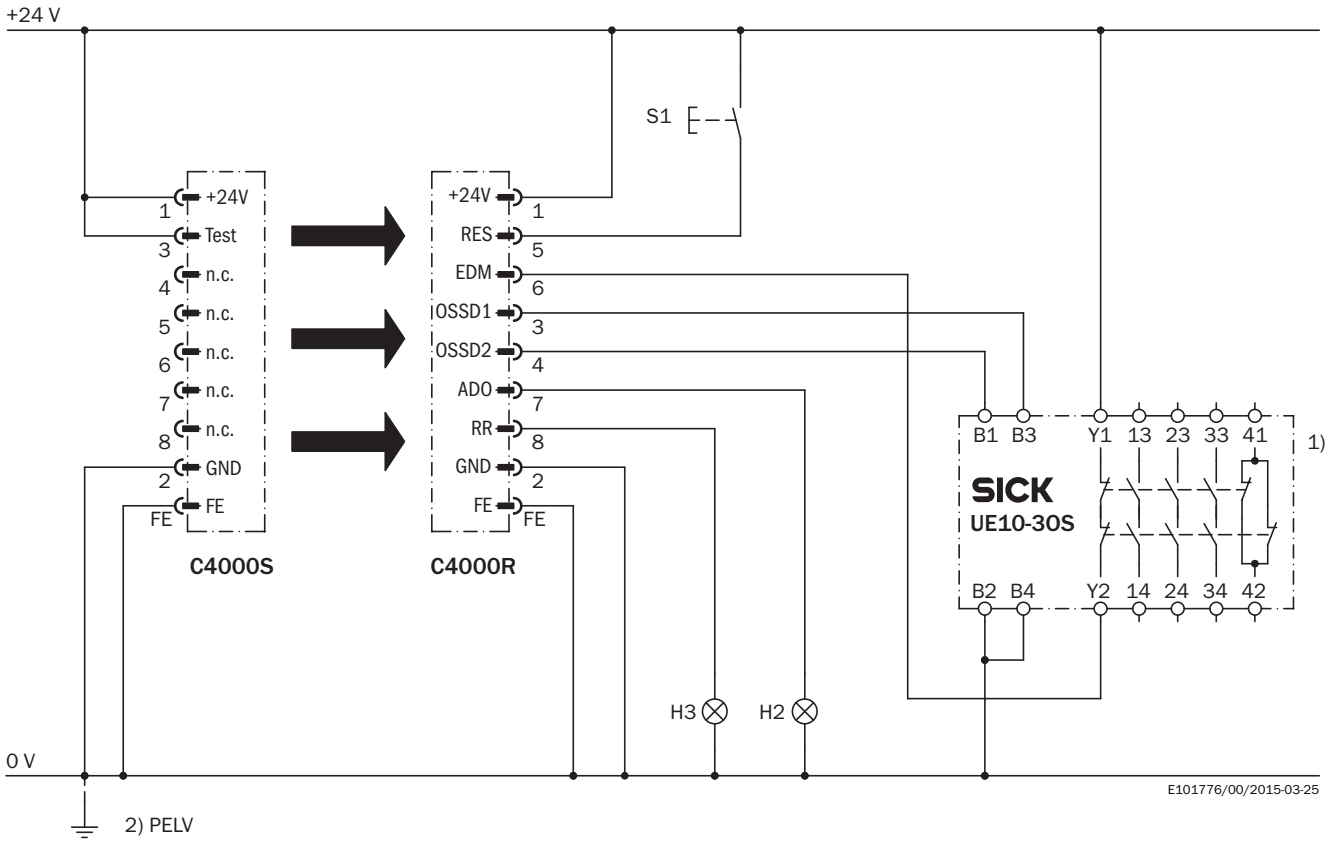

Task

Connection of a C4000 Standard/Advanced/Palletizer/Fusion safety light curtain to UE10-3OS. Operating mode with restart interlock and external device monitoring.

Function

When the light path is clear and the UE10-3OS is de-energized and functioning correctly, the yellow LED on the receiver and the H3 lamp flash. The system is ready to be switched on. The system is enabled by pressing S1 (button is pressed and released). The OSSD1 and OSSD2 outputs are live, and the UE10-3OS is switched on. Upon the interruption of one of the light beams, the UE10-3OS is deactivated by the OSSD1 and OSSD2 outputs.

Possible faults

Cross-circuits and short-circuits of the OSSDs are detected and lead to the inhibited state (lock-out). The incorrect functioning of the UE10-3OS will be detected, but will not result in the loss of the shutdown function. Jamming of the S1 button prevents the output circuit from enabling. H2 lamp is illuminated if there is contamination (adjustable parameter).

Comments

[1] Output circuits: These contacts are to be connected to the controller such that, with the output circuit open, the dangerous state is disabled. For categories 4 and 3, this integration must be dual-channel (x/y paths). Single-channel integration in the control (z path) is only possible with a single-channel control and taking the risk analysis into account.

[2] PELV as required in EN 60204-1 / 6.4

The related operating instructions for the integrated devices must be observed.

Recommended accessories

Other models and accessories ➜ www.sick.com/C4000_Advanced

	Brief description	Type	part no.
device protection and care			
	• **Product family:** Cleaning agents • **Description:** Cloth for cleaning optical surfaces	Lens cloth	4003353
Mounting systems			
	• **Description:** Mounting kit 6, side bracket, rotatable • **Material:** Zinc diecast • **Details:** Zinc diecast • **Packing unit:** 4 pieces • **Suitable for:** All protective field heights	BEF-1SHABAZN4	2019506
	• **Description:** Mounting kit 2, rotatable, swivel mount • **Material:** Plastic • **Details:** Polyamide PA6 • **Packing unit:** 4 pieces • **Suitable for:** All protective field heights	BEF-2SMMEAKU4	2019659
	• **Description:** Mounting kit 1, mounting bracket, rigid, L-shaped, including fixing screws and washers • **Packing unit:** 4 pieces • **Suitable for:** All protective field heights	BEF-3WNGBAST4	7021352
	• **Description:** Stainless steel bracket, rotatable • **Material:** Stainless steel • **Details:** Stainless steel 1.4350, stainless steel 1.4301 • **Packing unit:** 4 pieces	BEF-2SMMEAES4	2023708
	• **Description:** Omega bracket, rotatable, fixable with only one screw, for mounting on the swivel mount • **Packing unit:** 4 pieces • **Suitable for:** All protective field heights in large housing	BEF-2SMMEAAL4	2044847
Commissioning aids and test equipment			
	• **Product:** Alignment aids • **Dimensions (W x H x L):** 19 mm 67.3 mm 66.9 mm • **Description:** Laser alignment aid for various sensors, laser class 2 (IEC 60825). Do not look into the beam!	AR60	1015741
	• **Product:** Alignment aids • **Description:** Adapter AR60 for housing cross-section 48 mm x 40 mm	AR60 adapter, 48x40	4032461
	• **Product:** Alignment aids • **Description:** Adapter AR60 for housing cross-section 48 mm x 40 mm in PU3H device column	AR60 adapter, 48x40, PU3H	4056731

	Brief description	Type	part no.
connectors and cables			
	• **Connection type head A:** Male connector, M8, 4-pin, straight • **Connection type head B:** Male connector, USB-A, straight • **Cable:** 2 m, 4-wire, PVC • **Description:** Unshielded	DSL-8U04G02M025KM1	6034574
	• **Connection type head A:** Male connector, M8, 4-pin, straight • **Connection type head B:** Male connector, USB-A, straight • **Cable:** 10 m, 4-wire, PVC • **Description:** Unshielded	DSL-8U04G10M025KM1	6034575
	• **Connection type head A:** Female connector, M26, 12-pin, straight • **Connection type head B:** Flying leads • **Signal type:** Sensor/actuator cable • **Cable:** 5 m, 12-wire, PVC • **Description:** Sensor/actuator cable, unshielded • **Connection systems:** Flying leads	DOL-0612G05M075KM0	2022545
	• **Connection type head A:** Female connector, M26, 12-pin, straight • **Connection type head B:** Flying leads • **Signal type:** Sensor/actuator cable • **Cable:** 10 m, 12-wire, PVC • **Description:** Sensor/actuator cable, unshielded • **Connection systems:** Flying leads	DOL-0612G10M075KM0	2022547
	• **Connection type head A:** Female connector, M26, 12-pin, straight • **Connection type head B:** Flying leads • **Signal type:** Sensor/actuator cable • **Cable:** 15 m, 12-wire, PVC • **Description:** Sensor/actuator cable, unshielded • **Connection systems:** Flying leads	DOL-0612G15M075KM0	2022548
	• **Connection type head A:** Female connector, M26, 12-pin, straight • **Connection type head B:** Flying leads • **Signal type:** Sensor/actuator cable • **Cable:** 20 m, 12-wire, PVC • **Description:** Sensor/actuator cable, unshielded • **Connection systems:** Flying leads	DOL-0612G20M075KM0	2022549
	• **Connection type head A:** Female connector, M26, 12-pin, straight • **Connection type head B:** Flying leads • **Cable:** 5 m, PVC • **Description:** Unshielded • **Connection systems:** Flying leads • **Note:** Without EFI: Pin 9 and 10 not connected	DOL-0610G05M075KM1	2046888
	• **Connection type head A:** Female connector, M26, 12-pin, straight • **Connection type head B:** Flying leads • **Cable:** 10 m, PVC • **Description:** Unshielded • **Connection systems:** Flying leads	DOL-0610G10M075KM1	2046889

	Brief description	Type	part no.
	• **Note:** Without EFI: Pin 9 and 10 not connected		
	• **Connection type head A:** Female connector, M26, 12-pin, straight, A-coded • **Description:** Unshielded • **Connection systems:** Crimp contacts • **Permitted cross-section:** 0.5 mm² ... 1.5 mm² • **Note:** 12 crimping contacts enclosed	DOS-0612G000GA3KM(	6020757
	• **Connection type head A:** Female connector, M26, 12-pin, angled, A-coded • **Description:** Unshielded • **Connection systems:** Crimp contacts • **Permitted cross-section:** 0.5 mm² ... 1.5 mm² • **Note:** 12 crimping contacts enclosed	DOS-0612W000GA3KM(	6020758
	• **Connection type head A:** Male connector, M26, 12-pin, straight, A-coded • **Description:** Unshielded • **Connection systems:** Crimp contacts • **Permitted cross-section:** 0.5 mm² ... 1.5 mm² • **Note:** 12 crimping contacts enclosed	STE-0612G000GA3KM(	6021191
	• **Connection type head A:** Male connector, M26, 12-pin, angled, A-coded • **Description:** Unshielded • **Connection systems:** Crimp contacts • **Permitted cross-section:** 0.5 mm² ... 1.5 mm² • **Note:** 12 crimping contacts enclosed	STE-0612W000GA3KM(	6021192
	• **Connection type head A:** Female connector, M12, 8-pin, straight • **Connection type head B:** Male connector, M12, 8-pin, straight • **Signal type:** Sensor/actuator cable • **Cable:** 1 m, 7-wire, PUR, halogen-free • **Description:** Sensor/actuator cable, shielded	DSL-127SG01ME25KM(	2076628
system plugs and extension modules			
	• **Applications:** Functionality upgrade • **Description:** Upgrades the C4000 Standard, Advanced, Palletizer, Entry/Exit, and Fusion to include the functions defined in the technical specifications, e.g., bypass, operating mode switching, and PSDI in the case of C4000 Standard, Advanced. • **Compatible sensor types:** C4000 safety light curtains	UE402	1023577

SICK AT A GLANCE

SICK is one of the leading manufacturers of intelligent sensors and sensor solutions for industrial applications. A unique range of products and services creates the perfect basis for controlling processes securely and efficiently, protecting individuals from accidents and preventing damage to the environment.

We have extensive experience in a wide range of industries and understand their processes and requirements. With intelligent sensors, we can deliver exactly what our customers need. In application centers in Europe, Asia and North America, system solutions are tested and optimized in accordance with customer specifications. All this makes us a reliable supplier and development partner.

Comprehensive services complete our offering: SICK LifeTime Services provide support throughout the machine life cycle and ensure safety and productivity.

For us, that is "Sensor Intelligence."

WORLDWIDE PRESENCE:

Contacts and other locations –www.sick.com

SICK
Sensor Intelligence.